KANAGAWA
INSTRUMENTS

Smart Pressure Transmitter

Model: KSPT



Overview

KSPT chip adopts advanced MEMS monocrystalline silicon pressure sensor chip. The sensor signal is converted into a standard signal output by a dedicated signal processing module. After long-term aging and stability screening, the product performance is stable and reliable. It is applied to the outdoor scene where the environment is harsh. At the same time, it can display on-site pressure, zero point and full range migration. The installation port form of KSPT monocrystalline silicon pressure transmitter can be processed according to the requirements of users, and can also be compatible with other brands of transmitters. This series of products are widely used in industrial process control, petroleum, chemical, metallurgical and other industries.

Features

- Advanced MEMS monocrystalline silicon pressure sensor chip adopted
- Wide pressure range covering
- Double-wire mode, 4～20mA HART® protocol digital communication option
- Intelligent LCD gauge outfit with backlight
- With local zero and pressure range adjustment
- Complete varieties, high accuracy, good stability,
- Isolation ex-proof housing structure, strong resistance to the frequency conversion interference
- No mechanical transmission parts, strong anti-vibration

Applications and industries

Process control fields for the industries such as petroleum, chemical industry, metallurgy, electricity, food, papermaking, medicine, machine manufacturing, scientific experiment and military aviation etc.

Performance parameters

Pressure range	±6kPa G,±40kPa G,±100kPa G,-100～250kPa G,0～100kPa A,0～250kPa A, -0.1～1MPa G,-0.1～3MPa G,0～10MPa S,0～20MPa S,0～40MPa S
Pressure reference	Gauge pressure |Absolute pressure |Sealed gauge pressure
Supply	12V～32V, recommended 24V
Output	4～20mA+HART protocol
Accuracy	±6kPa: ±0.1%FS; Other pressure ranges: ±0.075%FS （Standard pressure range, 25±5℃）±0.055%FS, ±0.025%FS
Temperature drift	±6kPa: ±0.3%FS; Other pressure ranges: ±0.25%FS （Standard pressure range, -20～70℃）
Ambient temperature	-30℃～70℃
Medium temperature	-40℃～120℃
Vibration resistance	20g（20～5000Hz)
Shock resistance	100g（11ms）
Overpressure	Please see pressure range selection
Long-term stability	±0.1%FS/year
Protection grade	IP67
Ex-proof grade	Ex d IIC T6 Gb
Material	Housing cast aluminum alloy; isolation diaphragm 316L
Medium compatibility	All kinds of media compatible with SS316L
Response time	HART collects data from sensor: 0.1s; HART outputs data: 0.5s

Component diagram

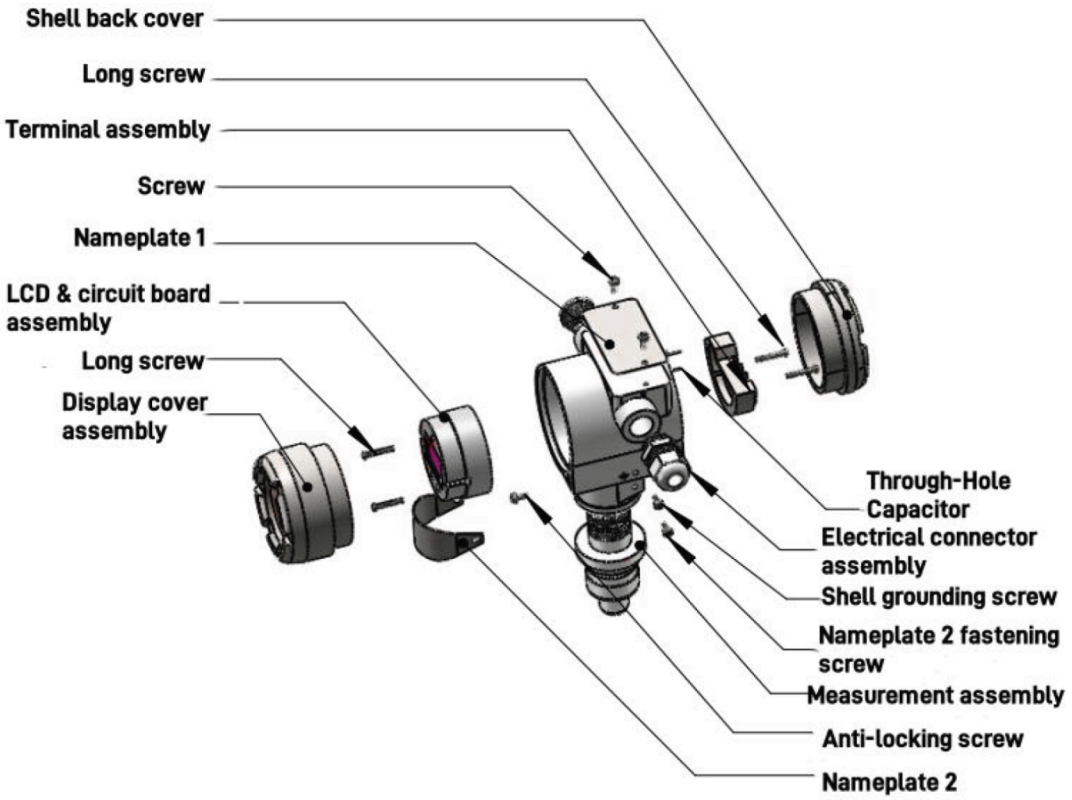

HART communication connection diagram

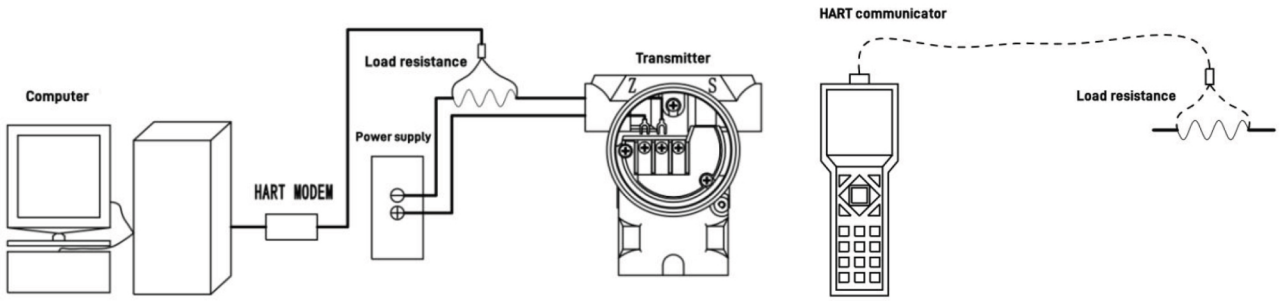

Outline dimension

Product model	Product model	In mm
KSPT-W-AP/GP	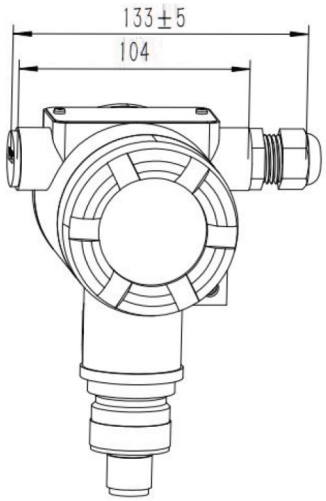	
	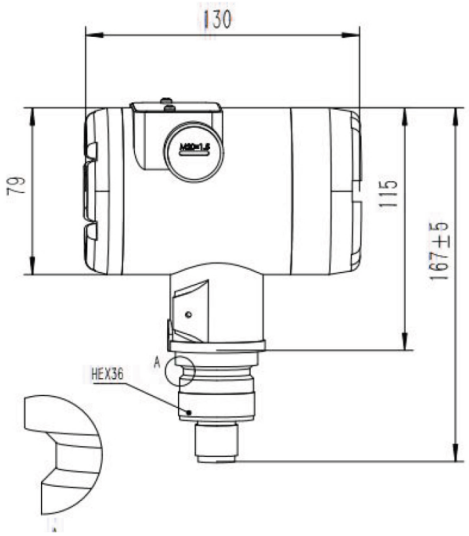	

Pressure connection

Thread code	C1：M20×1.5-6g	C2：G1/2
Dimension In mm	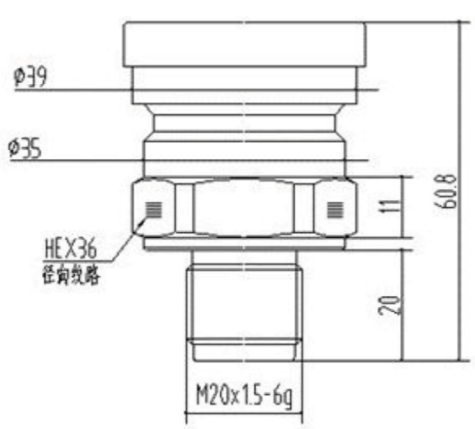	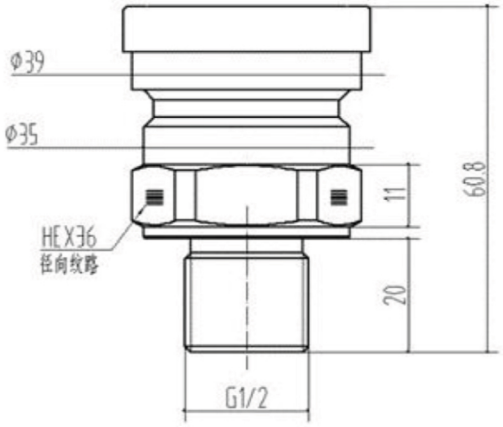
Recommended torque	15～25Nm	15～25Nm
Thread code	C7：NPT1/2	C7F：NPT1/2（Female）
Dimension In mm	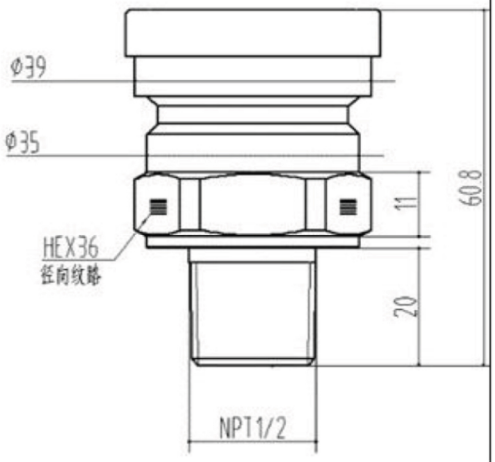	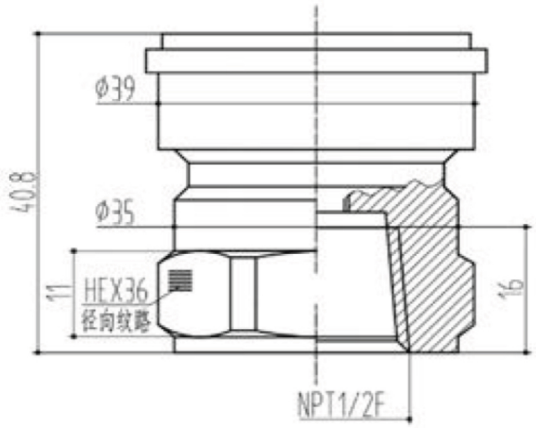
Recommended torque	15～25Nm	15～25Nm

Bracket (In mm)

L shape bracket	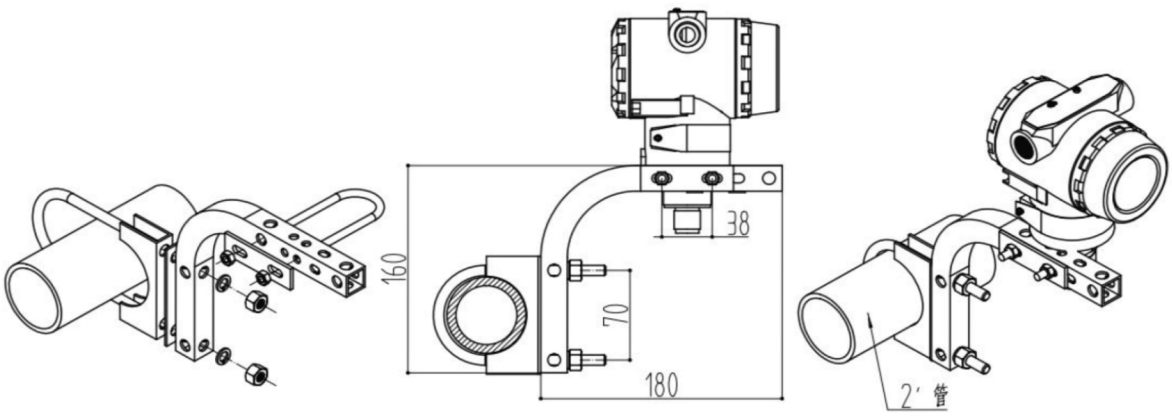

Installation diagram (for reference only)

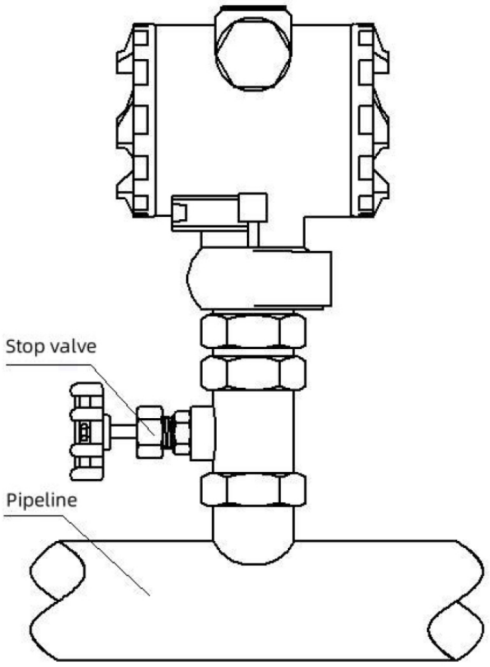

Installation tips:

(1) The product is installed vertically onpressure port on site.

(2) When installing outdoor, the transmitter should be placed in a ventilated and dry place as far as possible to avoid direct sunlight and rain, otherwise the performance will be deteriorated or malfunction.

(3) When the product is installed infrequentlightning areas, it should be marked with “Lightning Protection” when ordering. It is also recommended that users install lightning protection device on site and ensure reliable grounding of product and power supply, which can reduce the probability of lightning damage to the transmitter.

(4) If the transmitter is found to have no output or the output is abnormal after installation, please check:

a Whether the electrical connection is accurate and firm

b Is the supply voltage too low or the load resistance is too large

Pressure range selection

Pressure range code	Pressure range	Overload pressure
6kG	±6kPa	300kPa
40kG	±40kPa	1MPa
100kG	±100kPa	2MPa
250kG	-100～250kPa	4MPa
100kA	0～100kPa A	2MPa
250kA	0～250kPa A	2MPa
1MG	-0.1～1MPa	6MPa
3MG	-0.1～3MPa	12MPa
10MS	0～10MPa	20MPa
20MS	0～20MPa	40MPa
40MS	0～40MPa	60MPa

Note: G: Gauge pressure, A: Absolute pressure, S: Sealed gauge pressure

How to order

KSPT - W- GP - 40k C7 M4 J6X

Product model
KSPT-W-GP: Gauge Pressure
KSPT-W-AP: Absolute Pressure

Pressure range
6k: ±6kPa Gauge Pressure
40k: ±40kPa Gauge Pressure
100k: ±100kPa Gauge Pressure
250k:-100～250kPa Gauge Pressure
100kA:0～100kPa Absolute Pressure
250kA: 0～250kPa Absolute Pressure
1M:-0.1～1MPa Gauge Pressure
3M:-0.1～3MPa Gauge Pressure
10M:0～10MPa Sealed gauge pressure
20M: 0～20MPa Sealed gauge pressure
40M: 0～40MPa Sealed gauge pressure

Electrical connection
J6X =Ex-proof housing with display （M20×1.5）
J16X =Ex-proof housing with display（NPT1/2 female）

Diaphragm material
Default: 316L

Pressure connection
C1: M20×1.5
C2: G1/2
C7: NPT1/2
C7F: NPT1/2 female

Example: KSPT-W-GP-40kC7M4J6X

The product model is KSPT-W-GP Gauge Pressure, 40k:pressure range40kPa, output:4～20mA +HART protocol, C7: pressure connection NPT1/2, M4: diaphragm material is 316L, J6X: electrical connection is ex-proof housing with display (M20×1.5), Gauge outfit: Kanagawa gauge outfit.

Tips:

Kanagawa reserves the right to make any change in this publication without notice. The information provided is believed to be accurate and reliable as of this product sheet.