KANAGAWA INSTRUMENTS

Vortex Flow Meter

Model: KVF



Features

KVF is the multivariable flowmeter with inline wet steam measurement. KVF guarantees excellent measuring accuracy and highest plant availability at low flow rates of gas, steam and liquids. With genuine loop-powered technology, KVF enables cost-effective and seamless integration into existing infrastructures. It offers highest operational safety in hazardous areas.

Application

Easy energy management – integrated temperature and pressure measurement for steam and gases

Reliable, secure measurement technology – compliance with international Vortex standard ISO 12764

Same accuracy down to Re 10 000 – most linear Vortex meter body

Long-term stability – robust drift-free capacitive sensor

Convenient device wiring – separate connection compartment, various Ethernet options

Safe operation – no need to open the device

Operating Principle

Vortex flow meters measure fluid velocity using a principle of operation referred to as the von Karmán efect, which states that when flow passes by a bluff body, a repeating pattern of swirling vortices is generated. In a Vortex flow meter, an obstruction in the low path, often referred to as a shedder bar, serves as the bluff body. The shedder bar causes process fluid to separate and form areas of alternating differential pressure known as vortices around the back side of the shedder bar.

Vortex Flow Meter - KVF Series

Working Principle

Vortex flow meters measure fluid velocity using a principle of operation referred to as the von Kármán effect, which states that when flow passes by a bluff body, a repeating pattern of swirling vortices is generated.

In a Vortex flow meter, an obstruction in the flow path, often referred to as a shedder bar, serves as the bluff body. The shedder bar causes process fluid to separate and form areas of alternating differential pressure known as vortices around the back side of the shedder bar.

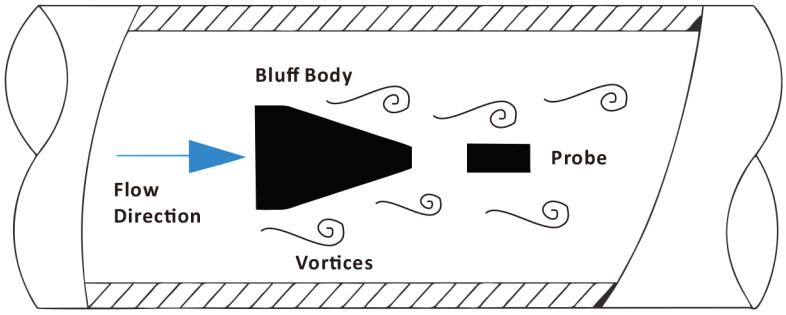

Computational formula as follows:

F=St*V/md ..... **Formula 1**
Q=3600*F/K ..... **Formula 2**
M=Q*p ..... **Formula 3**

Among Formula:

F: Fluid flow through bluff body generate frequency of vortex (Unit : Hz)
St: Strouhal constant (zero dimension)
V: Mean velocity of fluid inside the pipeline(Unit :m/s)
m: The ratio between Lune Circulation area of bluff body at both sides and cross-sectionalarea(Unit:zero dimension)
d: Upstream face width of bluff body inside vortex flow meter (Unit : m)
D: Inside diameter (ID) of vortex flow meter (Unit :m)
Q: Instantaneous volume flow(Unit :m^3/h)
K: Instrument coefficient of vortex flowmeter (Unit :pulses/m^3)
M:Instantaneous mass flow(Unit : kg/ h)
p: Fluid density(Unit : kg/ m^3)

Advantages of Vortex Technology

Uniquely designed for easy installa on, reduced maintenance and superior reliability in gas, liquid and steam flows.

Vortex flow meters offer many advantages for flow measurement including easy installation without impulse lines, no moving parts to maintain or repair, less leak poten al and a wide flow turndown range. It also offers very low power consump on, allowing for use in remote areas.

Addionally, vortex flow meter is unique in that they can accommodate liquids, gasses, steam and corrosive applications. It is also able to withstand high process pressures and temperatures.

Features

- No moving parts inside, easier installation and maintenance
- Digital filter amplifier with wide measurement range and anti-interface performance
- Wide flow ratio up tp 33:1
- High accuracy up to ±0.5% for A series
- Max temperature up to +420℃ for A series
- Size range is from DN10-DN2000
- Compact and remote structure for option
- Power-off record keeping function

Applications

Vortex flow meters have multiple applications across many industries due to their reliable and accurate measurement capabilities.
Some common applications of vortex flow meters include.




- Chemical and Petrochemical Industry: Vortex flow meters measure the flow rate of various liquids, such as solvents, acids, and alkalis. They are also used to measure the flow rate of gases, such as nitrogen, oxygen, and hydrogen.

- Food and Beverage Industry: Vortex flow meters measure the flow rate of liguids, such as milk, beer, and soft drinks.




- HVAC Industry: Vortex flow meters measure the flow rate of water and other fluids in heating, ventilation, and air conditioning systems.

- Pharmaceutical Industry: Vortex flow meters are used to measure the flow rate of liquids, such as solvents, acids, and alkalis, in various production processes.




- Power Generation Industry: Vortex flow meters are used to measure the steam flow rate in power plants.

- Water and Wastewater Treatment: In the field of water and wastewater treatment, vortex flow meters are used to measure the flow of water supply, drainage, and treatment processes, helping to monitor water resource usage and ensure water quality control.




- Environmental Monitoring: Vortex flow meters are also used in environmental monitoring, such as measuring the flow of gases in the atmosphere, which is important in meteorological research and environmental protection.

- Laboratory Research: In scientific laboratories, vortex flow meters are used to measure the flow of gases and liquids to support research and experiments, making them an ideal choice for laboratory measurements due to their high precision and reliability.

		
Compact Type (T & P Compensation)	Compact Type (Without T & P Compensation)	Insertion Type
		
Wafer Type	Wafer Type (Remote Display)	Remote Type

*Notice: Colors are changed without inform.

Technical Data

Model	B Series	A Series	C Series
Medium	Liquid; Gas; Steam		Liquid; Gas
Diameter	DN15-DN300	DN10-DN500	DN200-DN2000
Accuracy	±1.5%; ±1.0%	±1.0%; ±0.5%	±2.5%
Structure	Compact type; Remote type		
Compensation Type	Without compensation; Single temperature compensation; Single pressure compensation; Temperature & pressure compensation		Without
Min. Temperature	-40°C	-40°C; -200°C	-40°C
Max. Temperature	+150°C; +260°C; +300°C	+150°C; +260°C; +320°C; +420°C	+150°C; +220°C
Body Material	SS304; SS316; SS316L		
Connection Type	Flange; Wafer		Insertion
Protection	IP65	IP65; IP67	IP65
Explosion-proof	Exia II C T1-T6 Ga Exd II CT6 Gb		Exia II C T1-T6 Ga
Communication	RS485; Hart@V7.0		
Power Supply	24V DC; 3.6V lithium battery		

*Notice: 1. The remote type is with 10m wires as default, max up to 15m.
2. The wafer type can't be with T & P compensation, only is single temperature.
3. It can't be battery power if along with the HART comm. output.
4. It can't be with Ex if the B series with T & P compensation.
5. Note: 2-wire 4-20mA and RS485 cannot be used at same time.
3-wire 4-20mA and RS485 can be used at same time.

Model Selection

***B Type Model Selection**

Model	Suffix Code											Description
KVF	❶	❷	❸	❹	❺	❻	❼	❽	❾	❿	⓫	**Vortex Flow Meter**
Fluid	L											Liquid
	G											Gas / Air
	S											Steam
Diameter		XXX										DN15-DN300
Structure			S									Compact type
			L									Remote type (10m cables as default, max up to 15m)
Converter Type Digital Display (*4-20mA as default, Pulse is optional(NPN type)*				C1								Without T & P compensation type, apply for liquid
				C2								Without T & P compensation type, apply for gas/steam
				V1								Single temperature compensation type for gas/steam only (≥DN25)
				V2								Single pressure compensation type for gas/steam only (≥DN25)
				DB								T & P compensation, for gas/steam application (≥DN25)
Communication					R							RS485
					H							HART/V7.0 (only power for 24V DC, NONE battery)
					N							NONE
Power Supply						1						24V DC
						2						24V DC + Battery (3.6V lithium)
						3						Single Battery , no any output
Body Material							S4					SS304
							S6					SS316
							SL					SS316L
Explosion-proof								NA				NONE Ex
								CT				Exia II C T1-T6 Ga
								BT				Exd II CT6 Gb (NOT available for DB type)
Connection Type									DXX			D16: DIN PN16 Flange; D25: DIN PN25 Flange...
									JXX			J10: JIS 10K Flange; J20: JIS 20K Flange...
									AXX			A15: ANSI 150# Flange; A30: ANSI 300# Flange...
									WAF			Wafer connection (can't do T & P compensation, only C type is available)
Temperature										T1		-40°C...+150°C
										T2		-40°C...+260°C
										T3		-40°C...+300°C
Accuracy											15	±1.5%, as default
											10	±1.0%, available for C1 type only

Vortex Flow Meter Selection Guide

KVF – L –50 – S – C1 – R – 1 – S4 – NA – DXX – T1 – 15

KVF : Vortex Flow Meter
L: Liquid
50: DN50
S: Compact Type
C1: Without T & P compensation type, apply for liquid
R: RS485
1: 24V DC
S4: SS304
NA: NONE Ex
D16: DIN PN16 Flange
T1: -40°C...+150°C
15: ±1.5%

Model Selection

*A Type Model Selection

Model	Suffix Code													Description
KVF	❶	❷	❸	❹	❺	❻	❼	❽	❾	❿	⓫	⓬	⓭	Vortex Flow Meter
Fluid	L													Liquid
	G													Gas / Air
	S													Steam
Diameter		XXX												DN10-DN500
Structure				S										Compact type
				L										Remote type (10m cables as default, max up to 15m)
Converter Type Digital Display (*4-20mA as default, Pulse is optional(NPN type)*					C1									Without T & P compensation type, apply for liquid
					C2									Without T & P compensation type, apply for gas
					V1									Single temperature compensation type for gas/steam only (≥DN25)
					V2									Single pressure compensation type for gas/steam only (≥DN25)
					A									T & P compensation, for gas/steam application (≥DN25)
Communication						R								RS485
						H								HART/V7.0 (only power for 24V DC)
						N								NONE
Power Supply							1							24V DC
							2							24V DC + Battery (3.6V lithium)
							3							Single Battery , no any output
Body Material								S4						SS304
								S6						SS316
								SL						SS316L
Explosion-proof									NA					NONE Ex
									CT					Exia II C T1-T6 Ga
									CD					Exd II CT6 Gb
Connection										DXX				D16: DIN PN16 Flange; D25: DIN PN25 Flange...
										JXX				J10: JIS 10K Flange; J20: JIS 20K Flange...
										AXX				A15: ANSI 150# Flange; A30: ANSI 300# Flange...
										WAF				Wafer connection(can't do T & P compensation structure, only V1 type is available)
Temperature											T1			-40°C...+150°C
											T2			-40°C...+260°C
											T3			-40°C...+320°C
											T4			-40°C...+420°C
Accuracy												10		±1.0%, as default
												05		±0.5%, for C1 type available only
Protection													P5	IP65
													P7	It is only available when the Exd IICT6Gb is selected.

*Notice: Temperature of -200°C is available, need to be customized

KVF – L – 50 – S – C1 – R – 1 – S4 – NA – DXX – T1 – 10 – P5

KVF : Vortex Flow Meter
L: Liquid
50: DN50
S: Compact Type
C1: Without T & P compensation type, apply for liquid
R: RS485
1: 24V DC
S4: SS304
NA: NONE Ex
D16: DIN PN16 Flange
T1: -40°C...+150°C
10: ±1.0%
P5: IP65

Model Selection

*C Type Model Selection

Model	Suffix Code											Description
KVF	❶	❷	❸	❹	❺	❻	❼	❽	❾	❿	⓫	Insertion Vortex Flow Meter
Fluid	L											Liquid
	G											Gas
Diameter		XXX										DN200-DN2000
Structure			S									Compact type
			L									Remote type (10m cables as default, max up to 15m)
Converter Type Digital Display (*4-20mA as default, Pulse is optional(NPN type)*				C								*Digital display, 24VDC +4-20mA/Pulse*
Communication					R							RS485
					H							HART/V7.0 (only power for 24V DC)
					N							NONE
Power Supply						1						24V DC
						2						24V DC + Battery (3.6V lithium)
						3						Single Battery , no any output
Body Material							S4					SS304
							S6					SS316
							SL					SS316L
Explosion-proof								NA				NONE Ex
								CT				Exia II C T1-T6 Ga
Connection									IN			Insertion connection
Temperature										T1		-40°C...+150°C
										T2		-40°C...+220°C
Accuracy											25	±2.5% as default

Vortex Flow Meter Selection Guide

KVF – L –50 – S – C – R – 1 – S4 – NA – IN – T1 – 25

KVF : Insertion Vortex Flow Meter
L: Liquid
50: DN50
S: Compact Type
C: *Digital display, 24VDC +4-20mA/Pulse*
R: RS485
1: 24V DC
S4: SS304
NA: NONE Ex
IN: Insertion connection
T1: -40°C...+150°C
25: 2.5% as default

Flow Range

Liquid Measurement											
Density (kg/m³)	500	600	700	800	900	1000	1200	1400	1600	1800	Qmax
Diameter	Different density fluid, the mini flow rate Qmin(Unit:m³/h)										(Unit:m³/h)
DN15	0.66	0.55	0.52	0.41	0.4	0.39	0.33	0.31	0.29	0.26	4.5
DN20	1.27	1.1	1.08	0.99	0.88	0.66	0.64	0.62	0.59	0.57	8
DN25	1.43	1.32	1.21	1.16	1.1	0.99	0.9	0.84	0.78	0.75	12
DN32	2.09	1.98	1.87	1.78	1.72	1.65	1.6	1.49	1.32	1.1	20
DN40	3.85	3.52	3.3	3.08	2.86	2.51	2.42	2.31	2.2	2.09	32
DN50	5.17	4.73	4.29	4.07	3.96	3.85	3.3	3.08	2.86	2.75	50
DN65	7.81	7.15	6.93	6.82	6.71	6.6	5.5	4.95	4.62	4.4	84
DN80	12.1	11	10.56	10.12	10.01	9.9	8.8	8.36	7.7	6.6	127
DN100	22	19.8	18.7	17.6	16.5	15.4	14.3	13.2	11	9.9	198
DN125	30.8	28.6	27.5	26.4	25.3	24.2	23.1	22	19.8	15.4	310
DN150	57.2	55	49.5	46.2	39.6	35.2	33	30.8	28.6	22	445
DN200	108.9	96.8	85.8	77	68.2	62.7	58.3	55	47.3	38.5	791
DN250	202.4	181.5	165	143	121	97.9	88	79.2	74.8	60.5	1237
DN300	275	242	220	198	176	140.8	132	121	107.8	84.7	1780

Gas/ Air Measurement													
Density (kg/m³)	0.5	0.8	1.2	2.4	3.6	4.8	6	7.2	8.4	9.6	12	20	Qmax
Diameter	Different density fluid, the mini flow rate Qmin (Unit:m³/h)												Unit: (m³/h)
DN15	5.28	3.85	3.52	3.08	2.97	2.86	2.75	2.64	2.53	2.42	2.31	2.2	38
DN20	9.02	7.26	5.5	5.28	5.17	4.95	4.73	4.4	4.29	4.18	4.07	3.3	67
DN25	11	9.9	8.69	8.36	7.92	7.59	7.26	6.82	6.49	5.94	5.5	4.95	100
DN32	28.6	19.8	15.4	14.52	14.08	13.42	13.2	12.87	12.32	11.99	11.11	9.9	170
DN40	41.8	27.5	22	20.9	19.8	18.7	17.6	16.5	15.4	14.3	13.2	11	300
DN50	52.8	44	34.1	31.9	30.8	28.6	25.3	24.2	23.1	22	19.8	13.2	500
DN65	88	72.6	58.3	49.5	48.4	46.2	44	41.8	38.5	33	28.6	19.8	780
DN80	143	110	88	83.6	77	72.6	68.2	63.8	55	50.6	41.8	30.8	1200
DN100	198	176	132	121	110	99	88	77	68.2	61.6	52.8	38.5	2000
DN125	308	275	209	187	171.6	159.5	148.5	132	110	99	83.6	60.5	2900
DN150	418	341	308	286	264	242	220	198	176	154	121	93.5	4100
DN200	880	660	550	528	473	440	418	396	363	330	297	220	7500
DN250	1100	968	869	803	748	682	649	572	528	462	440	330	12500
DN300	1430	1309	1254	1166	1078	990	902	836	770	682	638	440	16500

Flow Range

Saturated Steam Measurement														
Mpa		0.1	0.2	0.3	0.4	0.5	0.6	0.8	0.9	1	1.2	1.6	2	Unit
°C		120	134	144	152	159	165	175	180	184	192	204	215	
Kg/m³		1.12	1.67	2.19	2.68	3.18	3.67	4.62	5.16	5.63	6.67	8.52	10.57	
Diameter (mm)		Different steam density corresponding with flow range												
15	Qmin	3.85	5.67	7.41	9.12	11	12.54	15.95	17.93	19.36	22.55	29.37	36.19	kg/h
	Qmax	35	51.5	67.4	83	100	115	146	163	176	205	268	329	
20	Qmin	6.84	10.07	13.09	16.17	19.58	22.44	28.49	32.01	34.43	40.04	52.25	64.35	
	Qmax	62.2	91.6	120	147	178	204	259	291	313	365	476	586	
25	Qmin	10.68	15.73	20.46	25.3	30.69	34.98	44.55	49.94	53.79	62.59	81.73	100.54	
	Qmax	97.1	143	187	230	279	318	405	454	489	569	743	914	
32	Qmin	17.49	25.63	33.66	41.47	50.27	57.42	72.93	81.95	88.11	102.63	133.1	163.9	
	Qmax	159	234	306	378	457	522	664	745	802	933	1218	1499	
40	Qmin	25.3	36.3	47.3	58.3	70.4	80.3	102.3	110	121	143	187	231	
	Qmax	300	440	575	710	860	980	1250	1400	1500	1750	2280	2810	
50	Qmin	38.5	38.5	57.2	69.3	83.6	96.8	122.1	137.5	143	165	220	275	
	Qmax	550	460	680	845	1020	1170	1480	1670	1800	2100	2730	3360	
65	Qmin	64.9	95.7	125.4	150.7	182.6	209	264	303.6	326.7	379.5	495	605	
	Qmax	790	1160	1520	1835	2222	2540	3230	3620	3970	4620	6030	7422	
80	Qmin	98.45	144.1	189.2	233.2	282.7	319	407	451	495	572	748	924	
	Qmax	1195	1760	2300	2800	3400	3900	4900	5580	6000	6999	9100	11000	
100	Qmin	0.15	0.22	0.3	0.36	0.44	0.51	0.64	0.72	0.77	0.9	1.1	1.43	t/h
	Qmax	1.87	2.75	3.6	4.43	5.36	6.12	7.78	8.73	9.4	11	14.3	17.6	
125	Qmin	0.24	0.35	0.46	0.56	0.68	0.78	1	1.1	1.21	1.41	1.84	2.2	
	Qmax	2.91	4.29	5.62	6.91	8.37	9.56	12	13.6	14.7	17	22.3	27.4	
150	Qmin	0.35	0.51	0.66	0.81	0.99	1.13	1.44	1.62	1.74	2.02	2.64	3.26	
	Qmax	4.2	6.18	8.09	9.96	12	13.8	17.5	19.6	21.1	24.6	32.1	39.5	
200	Qmin	0.62	0.9	1.19	1.45	1.76	2.01	2.56	2.87	3.09	3.61	4.71	5.8	
	Qmax	7.5	11	14.4	17.7	21.4	24.5	31.1	35	37.6	43.7	57.1	70.3	
250	Qmin	0.96	1.41	1.85	2.2	2.76	3.16	4	4.5	4.84	5.61	7.36	9.02	
	Qmax	11.6	17	22	27.6	33	38	48	54	58.7	68	89	110	
300	Qmin	1.38	2.04	2.66	3.28	3.97	4.54	5.78	6.48	6.97	8.12	10.56	12.98	
	Qmax	16.7	24.7	32	39	48	55	70	78	84	98	128	158	
350	Qmin	1.71	2.52	3.30	4.06	4.92	5.62	7.15	8.02	8.60	10.0	13	16	
	Qmax	22.8	33.6	44	54	65	74.9	95	106	115	133	174	215	
400	Qmin	2.24	3.29	4.30	5.30	6.40	7.30	9.30	10.5	11.2	13.1	17	21	
	Qmax	29	43.5	57	70	85	97	124	139	150	174	228	281	
450	Qmin	2.83	4.17	5.45	6.72	8.13	9.29	11.8	13.2	14.2	16.6	21.6	26.6	
	Qmax	37	56	72	89	108	123	157	176	190	221	289	26.6	
500	Qmin	3.49	5.15	6.74	8.29	12.3	14	17.9	20.1	21.6	25.2	33	40.5	
	Qmax	46	68	89.8	110	164	188	239	268	289	336	439	540	

*Notice: The above is for reference only, as the manufacturer will calculate the actual flow range based on actual working condition data."

Display



A: Functional region which consists of battery situation, comunication, current, frequency, flow percentage (Temperature could be available on request).

B: Units section which consists of 10 units: m3/h, L/h, L/min, us Gal/min,UK Gal/min, uS Gal/h, UK Gal/h, kg/h, t/h, ft3/h.

C: Flow rate (7 digital figure upperline).

D: Alarm sign which consists of SET prompt and alarm prompt.

E: Total flow (11 digital figure lower line) with two decimal places.

Structure

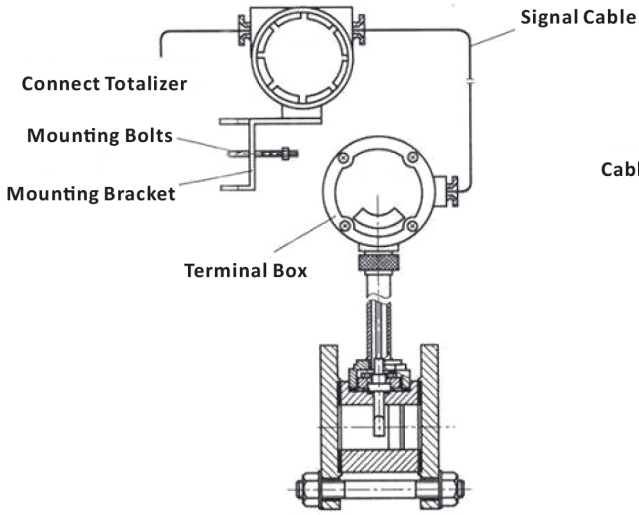

Remote Structure

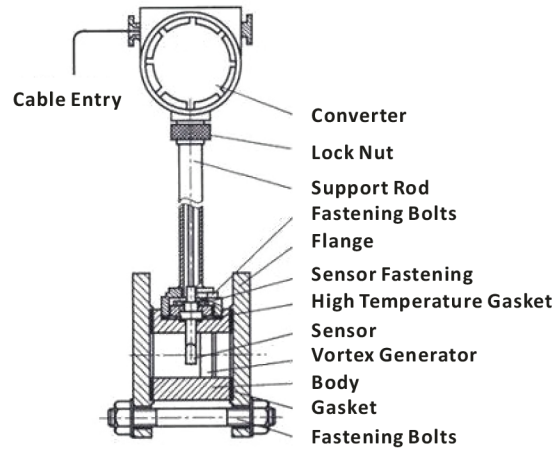

Compact Structure

Density Of Normal Gas (kg/m³)

Tag Density	Air	Hydrogen	Oxygen	Nitrogen	Chlorine	Ammonia gas	Semi- watergas
	1.293	0.0889	1.43	1.251	3.214	0.77	0.836
Tag Density	Argon	Acetylene	Methane	Ethane	Propane	Butane	Coke-oven gas
	1.79	1.017	0.717	1.357	2.005	2.703	0.4849
Tag Density	Ethylene	Propylene	Natural gas	Coal gas	CO	Co_2	
	1.264	1.914	0.828	0.802	1.25	1.977	

Installation

In order to correct measurement, upstream or downstream of flow meter should obligate enough straight length.

No components to effect fluid velocity in upstream of flow meter. All types of straight length installation reference:

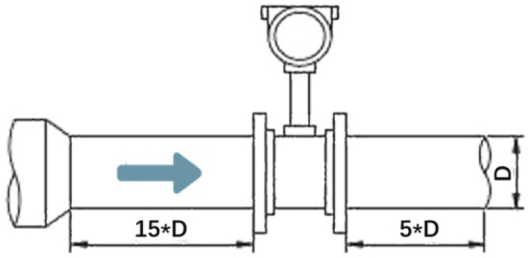

1. Pipe reducing

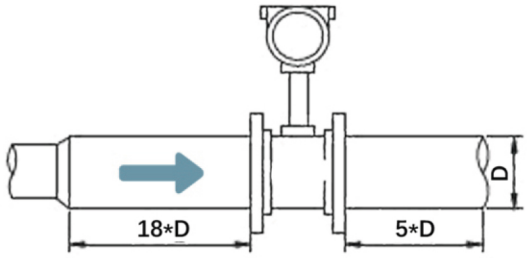

2. Pipe expanding

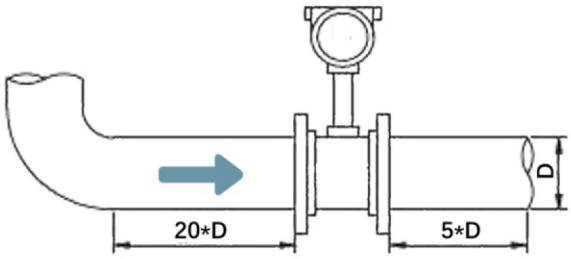

3. 1*90 elbow pipe

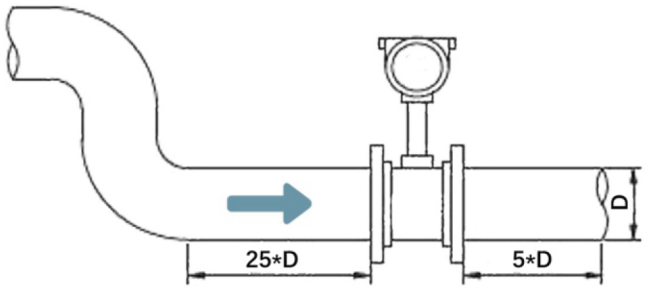

4. 2*90 elbow pipe in same plane

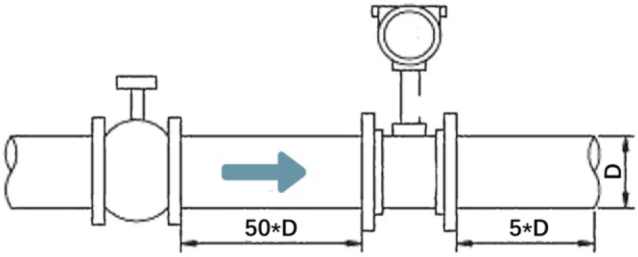

5. Stop valve

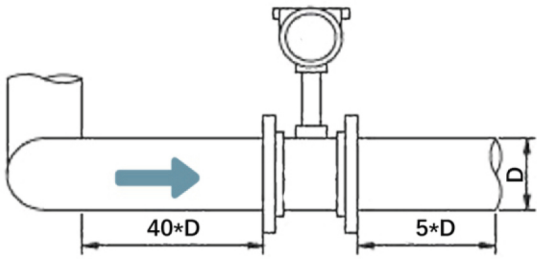

6. 2*90 elbow pipe in different planes

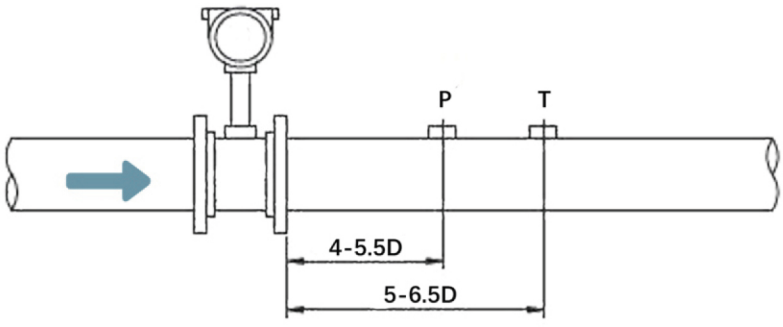

7. Pressure & temperature measuring point
(For the vortex meter integrated with pressure & temperature sensor)