


## Features

- The use of industrial-grade high-performance micro-controller integrated circuit, high accuracy, good stability, strong anti-jamming ability.
- Power supply using isolation circuit design, wide-format precision power supply, impact resistance, anti-jamming.
- "Plug and use, maintenance-free" measurements for monitoring and controlling continuous measurements
- Sensor signal with photoelectric compartment design with 4-20 mA output, connectivity PLC control system
- Long rod type is suitable for use in open and sealed tanks and cans up to 2m in length
- Explosion-proof certification

## Overview

KLDT Series tuning fork densitometer is installed by plug-in type, which is widely applicable to the detection of medium density in pipeline, open tank container and closed tank container. The fluid density directly depends on the vibration frequency received by the tuning fork when the sensor is inserted into the medium. The built-in temperature sensor provides temperature compensation for the sensor.
Application: petrochemical industry, brewing industry, food industry, pharmaceutical industry and mineral processing (such as clay, carbonate, silicate, etc.), specifically applied to the interface detection of multi product pipeline in the above industries, density detection of mixing mixture, end point monitoring of reactor, interface detection of separator.

## Working Principle

The sensor of tuning fork densitometer is designed according to the vibration principle of components. This vibrating element is similar to a tuning fork with two teeth. The fork body vibrates because of a piezoelectric crystal located at the root of the teeth. The frequency of vibration is detected by another piezoelectric crystal. Through phase-shifting and amplification circuit, the fork body is stabilized on the natural resonance frequency. When the medium flows through the fork, the change of resonance frequency is caused by the change of medium quality.

KLDT TUNING FORK RESONANT DENSITY METER

The density and vibration frequency of the medium conform to the following mathematical formula:

$D=K0+K1T+K2T2$

In the formula: D = density of measured medium, T = natural frequency of the fork, T2= frequency of the measured medium passing through the fork

K0, K1, K2 = constant

According to this formula, the accurate density of the medium can be calculated by the electronic processing unit.

## Pressure and Temperature Limits For Process Connections

You must ensure that the pressure and temperature limits of the instrument are not exceeded (if necessary), using suitable safety accessories. The pressure and temperature ratings of the instrument connections are in accordance with the relevant flange standards. Check the latest standards for process connections.
See table for pressure and temperature limits for zirconium process connections.

| Process flange type | Process and Temperature Ratings | | | |
|---|---|---|---|---|
| | 100°F (37.8°C) | 199.9°F (93.3°C) | 299.8°F (148.8°C) | 392°F (200°C) |
| 2" ANSI 150 | 226.3pis(15.6bar) | 197.3pis(13.6bar) | 159.5pis(11.0bar) | 110.2pis(7.6bar) |
| 2" ANSI 300 | 588.9pis(40.6bar) | 513.4pis(35.4bar) | 417.7pis(28.8bar) | 336.5pis(23.2bar) |
| DN50 PN16 | 229.2pis(15.8bar) | 175.5pis(12.1bar) | 137.8pis(9.5bar) | 107.3pis(7.4bar) |
| DN50 PN40 | 571.5pis(39.4bar) | 439.5pis(30.3bar) | 342.3pis(23.6bar) | 266.9pis(18.4bar) |

KANAGAWA INSTRUMENTS

# Technical Specification

| | |
|---|---|
| Density range | 0.5 – 2.5 g /cc (0 – 2500 kg/m3), 0~100% |
| Calibration range | 0.5 – 2.5 g /cc (0 – 2500 kg/m3), 0~100% |
| Accuracy | ± 0.001 g /cc (± 1 kg/m3)/± 0.002 g /cc (± 2 kg/m3) |
| Repeatability | ± 0.0001 g /cc (± 0.1 kg/m3) |
| Sensitivity level | 0.0001 cm3 / g |
| Temperature range | -40°C ~ +150°C |
| Max. working pressure | 0.1～4Mpa(customized 20MPa) |
| Fluid viscosity range | 0 – 600 cP |
| Temperature coefficient | ＜0.1 kg / m3 / °C(±0.5%) (after correction) |
| Pressure effect | Negligible |
| Built in temperature sensor | PT100 |
| Wetting material | 316L, 2205 Stainless steel, Hacalloy, Titanium alloy |
| Fork coating | Standard, PTFE or PFA |
| Power supply | 24VDC，≥500mA |
| Signal output | 4 -20 mA, 0-1000Hz, RS232, RS485 Modbus RTU |
| Output accuracy (20 °C) | ± 0.1% of reading or ± 0.05% FS |
| Output repeatability (- 40 ~ + 85 °C) | + 0.05% FS |
| Process connection | Flange, thread, hygienic chuck |
| Protection level | IP67 |
| Shell material | Aluminium alloy |

- **Guide for liquid and material compatibility of tuning fork densitometers**

| Liquid type | Name | Molecular formula | Concentration (%) | Zirconium | Ha C | Stainless steel |
|---|---|---|---|---|---|---|
| acid | hydrochloric acid | HCl | 0-40 | ☆ | ○ | × |
| | sulphuric acid | H2SO4 | 0-50 | ☆ | ○ | ○ |
| | | H2SO4 | 50-75 | ○ | ○ | × |
| | | H2SO4 | 75-98 | ○ | ○ | ○ |
| | nitric acid | HNO3 | 0-100 | ☆ | ○ | ○ |
| | phosphoric acid | H3PO4 | 0-98 | × | ☆ | ○ |
| alkali | sodium hydroxide | NaOH | 0-100 | × | ☆ | ○ |
| | Potassium hydroxide | KOH | 0-50 | ☆ | ☆ | ○ |
| | calcium hydroxide | Ca(OH)2 | 0-50 | ○ | ☆ | ○ |
| others | Urea (urea) | (NH2)2 CO | 0-100 | ☆ | ☆ | × |
| | sodium hypochlorite | NaOCl | 0-16 | × | ○ | × |
| | hydrogen peroxide | H2O2 | 0-90 | × | ☆ | ☆ |

☆Recommended ○ use under specific concentration and temperature limit × not use

## Dimension

Umit:mm

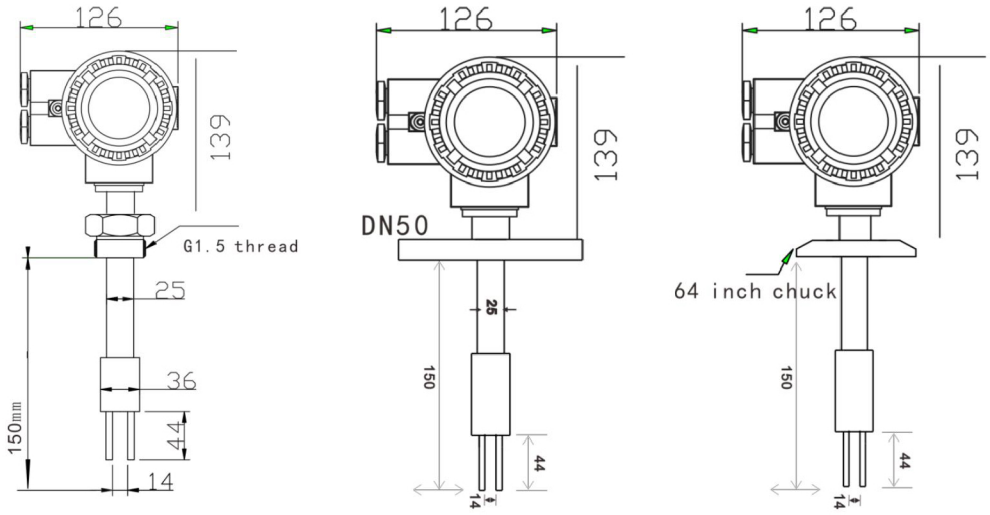


## Measuring Principle

| | | |
|---|---|---|
| Installation | T-type side opening plug-in installation | T-type side opening and retracting installation |
| Description | Fork part goes directly into the mainstream | Fork body shrinks into the open part of the line side |
| Velocity | Supervisor Road Flow Rate 0-1m/s | Supervisor Road Flow Rate 1-5m/s |
| Viscosity range | Up to 20000CP | Up to 100CP |
| Temperature | -50-150°C | -50-150°C |
| Main pipe size | ≥Horizontal pipe 100mm (4″)<br>≥Vertical pipe 150mm (6") | ≥50mm (2") |
| Advantages | Easy to install and high measurement accuracy | Reduces the wear of the grey paste fluid on the meter |
| Not available for | unstable flow rate | floc solution (e.g. pulp, etc.) |
| | | unstable flow rate |
| | the supervisor caliber is less than DN100 | viscosity has a progressive solution |
| | | the supervisor caliber is less than DN50 |
| | | the temperature effect of significant situation |
| Calculation of velocity: V = Q / (1/4 *π*d2)<br>Example: flow 20m3 / h, pipe diameter 100mm<br>V = 20 / 3600 / (1 / 4 * 3.14 * 0.1 * 0.1) = 0.7 m / S | | |

- **Installation of open pool or open tank**

Note: during the installation of open pool or open tank, support shall be used for fixing, and fork body of tuning fork can only be measured below the minimum liquid level. When there is mixing in open pool or open tank, protective cover shall be provided, and the inserting rod of tuning fork in this installation method is long, and the maximum length can be 2 meters.

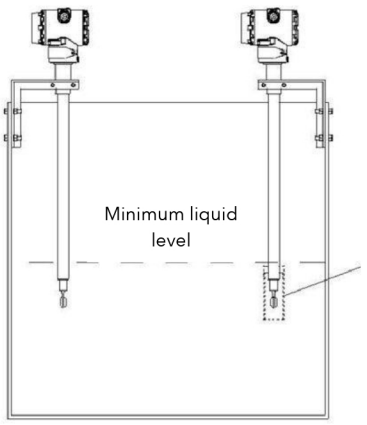

## Seal tank Installation

A. When the tank is installed at the top, it is similar to the open tank. The tuning fork should be below the liquid level. When mixing, it needs to be equipped with a protective cover. Generally, it is only for the tank with the top opening or the buried tank. To change the insertion depth, use a section of the support with a flange.
B. The fork part of the tuning fork densitometer is not totally closed. The boundary effect of the tube wall or container wall on the fluid plus the viscosity effect of the measurement medium itself will have a certain impact on the measurement and calibration of the sensor. In order to overcome these problems, according to different environments, we have summarized and set up the installation mode and pipe diameter to facilitate the selection under the same conditions. When the tank is installed at the side, the tuning fork can be directly extended into the tank without stirring; when there is stirring and no sedimentation, it can be installed with protective cover or T-shaped casing, and the tuning fork is in the protective cover or T-shaped casing; when there is stirring and sedimentation, it can be installed with bell mouth

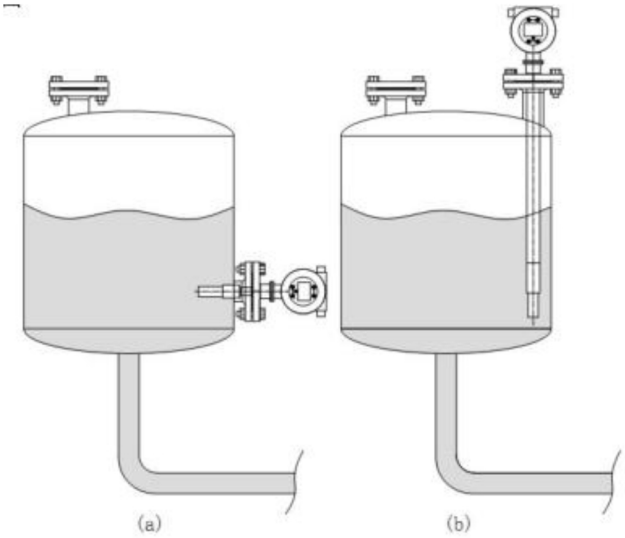


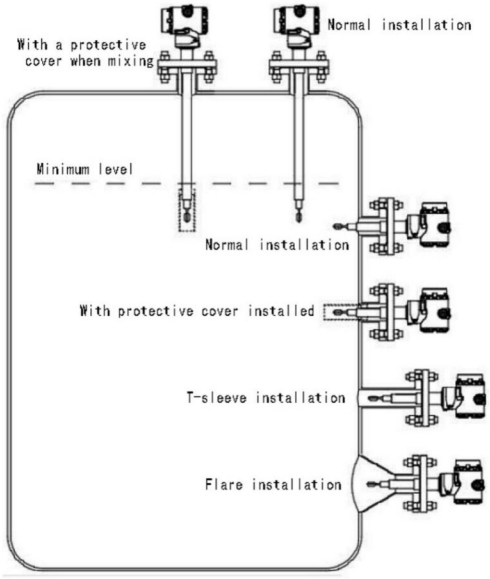


## Pipe Installation

Note: the fork part of the tuning fork densitometer is not totally closed. The boundary effect of the tube wall or container wall on the fluid plus the viscosity effect of the measuring medium itself will have a certain impact on the measurement and calibration of the sensor. In order to overcome these problems, according to different environments, we have summarized and set up the installation mode and pipe diameter to facilitate the selection under the same conditions. For pipeline installation, when the flow rate is less than 0.5m/s, the tuning fork can be directly extended into the pipeline; when the flow rate is more than 0.5m/s and there is no precipitation, the tuning fork can be installed with a protective cover or T-shaped casing, and the tuning fork can be installed in the protective cover or T-shaped casing; when there is precipitation, it can be installed with a bell mouth. At any time, the opening direction of the fork body should be in the vertical direction to avoid the accumulation of sediment or bubbles in the fork body Up.

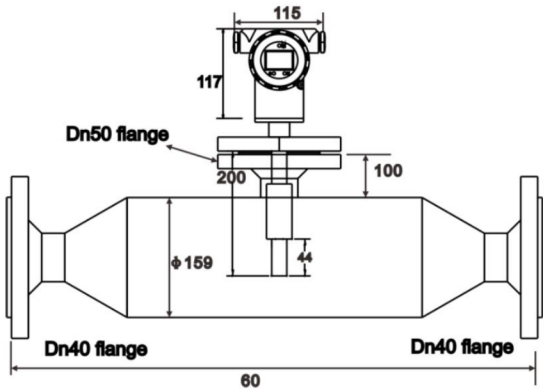


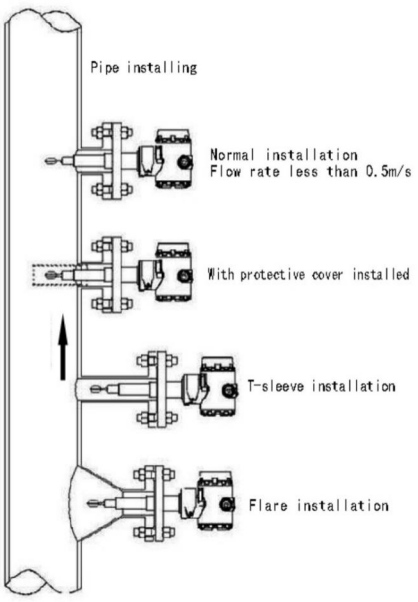

KANAGAWA INSTRUMENTS

# Ordering Code

| | | | | | | | | | | |
|---|---|---|---|---|---|---|---|---|---|---|
| **KLDT** | tuning fork densitometer | | | | | | | | | |
| | **CODE** | Type | | | | | | | | |
| | **I** | industrial type | | | | | | | | |
| | **H** | hygienic type | | | | | | | | |
| | | **CODE** | Range | | | | | | | |
| | | **S** | 0.5- 2.5 g /cc (500 – 2500 kg/m3) | | | | | | | |
| | | | **CODE** | Wetted part material | | | | | | |
| | | | **S** | 316L stainless steel | | | | | | |
| | | | **H** | Hastelloy alloy | | | | | | |
| | | | **C** | More customized | | | | | | |
| | | | | **CODE** | Process connection | | | | | |
| | | | | **A** | ANSI 150 ~1500 RF | | | | | |
| | | | | **DP1** | DIN 50 PN16 flange | | | | | |
| | | | | **DP4** | DIN 50 PN40 flange | | | | | |
| | | | | **S** | IDF and RJT sanitary | | | | | |
| | | | | **O** | More customized | | | | | |
| | | | | | **CODE** | Insertion length | | | | |
| | | | | | **1** | 150mm | | | | |
| | | | | | **2** | More customized | | | | |
| | | | | | | **CODE** | Fork coating | | | |
| | | | | | | **S** | Standard type | | | |
| | | | | | | **P** | PTFE | | | |
| | | | | | | **E** | Electrolytic polishing | | | |
| | | | | | | **C** | More customized | | | |
| | | | | | | | **CODE** | Working pressure | | |
| | | | | | | | **S** | 207 bar (3000psi) | | |
| | | | | | | | **C** | More customized | | |
| | | | | | | | | **CODE** | Working temperature | |
| | | | | | | | | **S** | -50°C~ +200°C | |
| | | | | | | | | **C** | More customized | |
| | | | | | | | | | **CODE** | Signal output |
| | | | | | | | | | **A1** | 4 -20 mA |
| | | | | | | | | | **R2** | RS485 |
| | | | | | | | | | **C** | More customized |
| **KLDT** | I | S | S | DP1 | 1 | S | S | S | A1 | - |