

Description

Compatible with a variety of analog signal electrodes. Complete functions, stable performance, easy operation, low power consumption, safety and reliability are the outstanding advantages of this instrument. This instrument is equipped with RS485 transmission interface, which can be connected to the host computer through ModbusRTU protocol to realize monitoring and recording. It can be widely used in industrial occasions such as thermal power generation, chemical industry, metallurgy, environmental protection, pharmaceutical, biochemical, food and tap water.
Industrial Online Multi Water Quality Monitoring Combination pH Sensor pH Electrode Probe For Wastewater treatment

Application

Designed for harsh media environments such as electroplating wastewater, sodium sulfate, and heavy metal-containing solutions

Technical Drawing

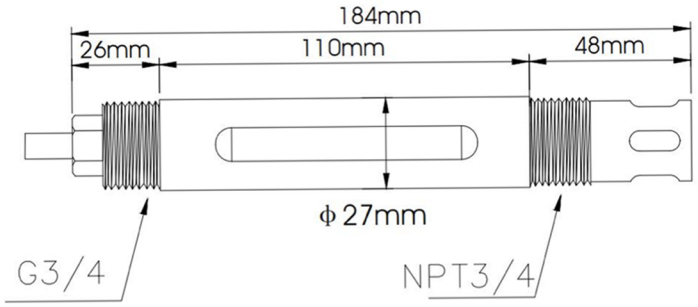

KANAGAWA INSTRUMENTS

Technical Specification

Parameter	Specification
pH Range	0–14 pH
Zero Point	7.00 ± 0.25
Temperature Range	0–80 °C
Pressure Resistance	0–0.6 MPa
Temperature Sensor	NTC10K / NTC2.2K / PT100 / PT1000
Housing Material	PP+GF
Membrane Resistance	< 80 MΩ
Reference System	Ag/AgCl
Liquid Junction	PTFE
Thread Connections	Lower NPT 3/4, Upper G 3/4
Cable Length	10 m or as agreed
Cable Connector	Pin, BNC, or as agreed

Ordering Code

Name	Description	Code
Temperature Sensor	NTC10K	N1
	NTC2.2K	N2
	PT100	P1
	PT1000	P2
Cable Length	5m	m5
	10m	m10
	15m	m15
	20m	m20
Cable Connector	Tinned wire ends	A1
	Y-type lug	A2
	In-line pin	A3
	BNC	A4