Optic Dissolved Oxygen

Model: KODO





Description:

Technology offers significant advantages over conventional Clark-type electrodes. It requires no electrolytes, membranes, or periodic polarization, eliminating routine maintenance like membrane replacement and electrolyte refilling. It is unaffected by flow rate or stirring speed, provides a much faster response time, and does not consume oxygen during measurement, making it ideal for small sample volumes or biological cultures.

Consequently, fluorescence-based DO sensors have become the gold standard in applications demanding high precision, low maintenance, and minimal sample disturbance. They are extensively used in environmental monitoring (long-term deployments in buoys or profilers), wastewater treatment process control, aquaculture, pharmaceutical/bioreactor fermentation, and advanced laboratory research. By offering superior reliability and operational simplicity, they have redefined the landscape of dissolved oxygen analysis.



Technical Drawing

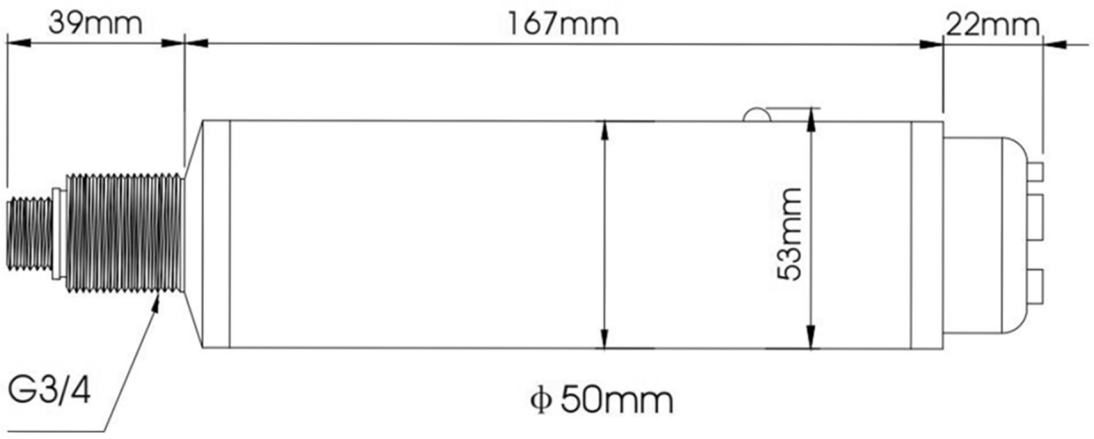

Specification

Power supply: 9~36VDC

Power consumption: ≤0.4W

Signal output: RS485 MODBUS RTU

Shell material: SUS316L + POM

Water resistance rating: IP68

Measurement range: 0-20 mg/L, 0-200%

Measurement accuracy: ±1%F.S

Pressure range: ≤0.1 Mpa

temperature compensation：NTC

Temperature range: 0-50°C

Calibration method: Anoxic water calibration, air calibration

Connection method: 4-core split cable

Thread: G3/4

Scope of application: General use, including river water, lakes, drinking water, and environmental protection.