



Descripcition

The Kanagawa Instruments KULT Series is an advanced ultrasonic level sensor designed to deliver precise and reliable level measurement for a wide range of industrial applications. With its modern technology and user-friendly design, the KULT Series provides efficient and maintenance-friendly level monitoring solutions.

The KULT Series offers high-precision level measurement performance, ensuring accurate and dependable data for critical industrial processes. Utilizing advanced non-contact ultrasonic technology, the sensor operates without direct contact with the measured media, preventing contamination while minimizing maintenance requirements.

Designed for seamless system integration, the KULT Series provides flexible data management and communication capabilities. It features a standard IP65 protection rating, with optional higher protection classes available for reliable operation in demanding environmental conditions.

Application

-Water treatment, such as pump rooms, water collection wells...
-Sewage treatment, such as biochemical reaction tanks, sedimentation tanks...
-Electricity .
-Mining: coal slurry pools, butter storage tanks, stockyard or mobile equipment control...
-Food industry: wineries, granaries, food storage tanks...
-Control systems

KANAGAWA
INSTRUMENTS

Characteristics

-Accuracy: ±0.25%F.S.
-Wide working temperature scope
-Automatic digital temperature compensation
-Excellent resistance against corrosion
-Versatile connectivity
-Wide power supply range
-Minimal power consumption
-Easy Installation and user-friendly design
-CE approval

Dimensions

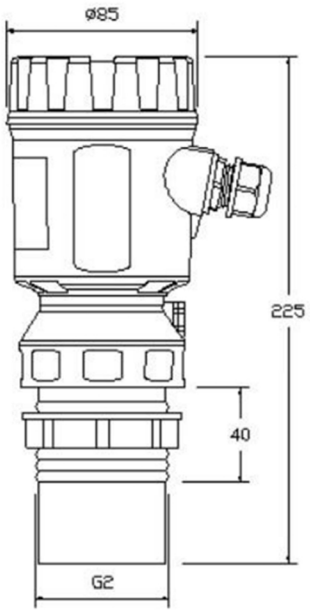

Technical Parameters

Model / Parameter	KULT
Range	2, 5, 8, 10, 12, 15m
Blind Area	<0.25- 0.6m (it varies with the measuring range)
Accuracy	±0.25%F.S
Transmission angle	<10°
Minimum display resolution	1mm
Frequency	20 KHz~2000KHz
Output	0~20mA; 4~20mA load>300Ω; 0~5V; 0~10V; RS485 (Modbus)
Wireless transmission	Built-in GPRS wireless communication with optional SMS data prompt (the collection system can be customized)
Switching output	Two-way NPN/relay (AC: 5A 250V DC: 10A 24V)
Power consumption	<1.5W
Power Supply	DC12-24Vor AC220V
Display	LCD
IP rating	IP65 (Higher IP ratings by customized)
Explosion-proof grade	EXiaII CT4Gb
Electrical port	M20×1.5
Mounting Interface	G2 or Ø60mm round hole with large washer

Order Information

P/N KULT SELECTION	05	E5	S13	1	01
Range	02=2m 05=5m 08=8m ... 15=15m				
Output	E56=0~20mA E6=0-5V E11=RS485 X=by customized	E5=4-20mA E7=0-10V S=Switch			
Power supply	S13=12-24Vdc S55=AC220V				
IP rating	1=IP65 X=By customized				
Cable length	01=Cable 1m X=Cable X m				