KANAGAWA INSTRUMENTS

Differential Pressure Transmitter

Model: KDP20





Overview

KDP20 Differential Pressure Transmitter is assembled using an OEM piezoresistive silicon differential pressure sensor filled with oil. The shell is made of stainless steel and has strong corrosion resistance. The two pressure ports are threaded and can be mounted directly on the measuring pipe or connected through the pressure pipe. KDP20 series have standard voltage/current output options, which can be easily installed and used. The products are widely used in the measurement and control of differential pressure, liquid level and flow in process control, aviation, aerospace, automotive, medical equipment, HVAC, etc.

Features

316L stainless steel diaphragm structure
Differential pressure measurement
Easy to install
Zero and full scale span adjustable externally
Short circuit protection and reverse polarity protection Excellent shock resistance, vibration resistance and electromagnetic compatibility resistance
Customization available

Applications

- Equipment support
- Scientific experiment
  Precision instrument
- Water supply and drainage
- Power plant differential pressure
- Flow

Notes:

Do not misuse documentation.

2 The information presented in this product sheet is for reference only. Do not use this document as a product installation guide.

3 Complete installation, operation, and maintenance information is provided in the instructions of the product.

Notes:

1 Do not touch the diaphragm with hard objects, which may cause damage to the diaphragm.

2 It is recommended to install three-valve manifold when using this product.

3 Please read the Instruction Manual of the product carefully before installation and check the relevant information of the product.

4 Strictly follow the wiring method for wiring, otherwise it may cause product damage or other potential faults

KANAGAWA INSTRUMENTS

Technical Parameters & Dimensions

Technical Parameters	
Pressure range	0~10kPa…2.5MPa
Static pressure	20MPa(Max.)
Pressure reference	Differential pressure
Supply & output	4~20mA(16~36VDC) 1~5V, 0~5V(12~36VDC)
Accuracy	0.5%FS(typ.)
Temp. drift	1.5%FS(@-10℃~70℃)
Response time	1ms(Up to 90%FS)
Service life	≥10×10^6 pressure cycles
Ambient temp.	-10℃~70℃
Medium temp.	-10℃~70℃
Storage temp.	-40℃~125℃
EMC-interference	IEC 61000-6-3
EMC-immunity	IEC 61000-6-2
Insulation resistance	200MΩ/250VDC
Shock resistance	100g(11ms)
Protection	IP65
Material	304
Max. mounting torque	25Nm

Dimensions

Dimension In mm

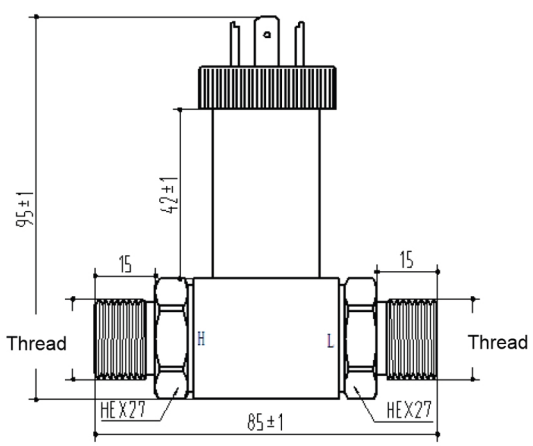

Structure & dimension

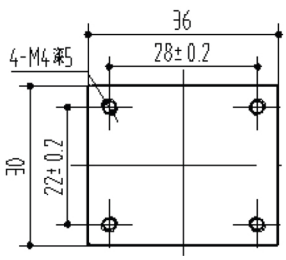

Bottom installation

Pressure port

Connector code	C1: M20×1.5-6g	C2: G1/2	C3: G1/4
Dimension In mm	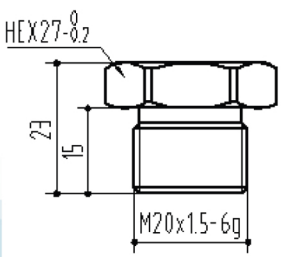	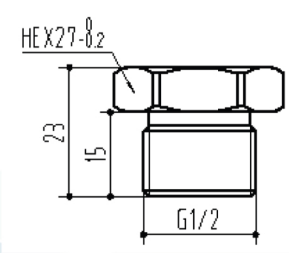	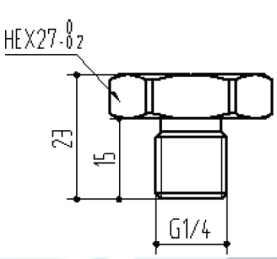
Recommended torque	15~25Nm	15~25Nm	15~25Nm

Pressure port (cont.)			
Connector code	**C5: NPT1/4, Z1/4**	**C9: G1/4 Female**	**C31: NPT1/4 Female**
Dimension In mm	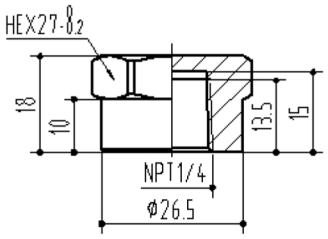	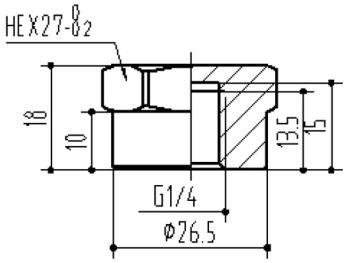	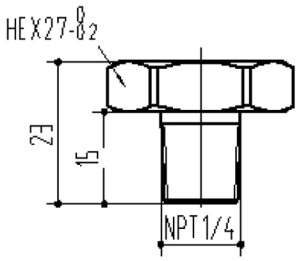
Recommended torque	15~25Nm	15~25Nm	15~25Nm
Connector code	**C35: M12×1**	**C36: R1/4 Female**	
Dimension In mm	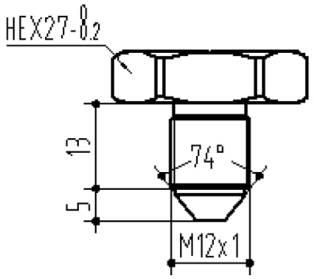	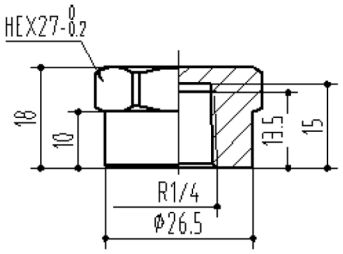	
Recommended torque	15~25Nm	15~25Nm	

Note: Torque depends on various factors such as material of gasket, supporting materials, lubrication of thread and pressure.

Pressure range selection				
Pressure range code	**Pressure range**	**Positive overpressure**	**Negative overpressure**	**Remark**
10k	0~10kPa	300%FS	300%FS	
20k	0~20kPa	300%FS	300%FS	
35k	0~35kPa	300%FS	300%FS	
70k	0~70kPa	300%FS	300%FS	
100k	0~100kPa	300%FS	300%FS	
200k	0~200kPa	300%FS	300%FS	
250k	0~250kPa	200%FS	200%FS	
500k	0~500kPa	200%FS	200%FS	
0.6M	0~0.6MPa	200%FS	200%FS	
1M	0~1MPa	200%FS	150%FS	
1.6M	0~1.6MPa	200%FS	150%FS	
2.5M	0~2.5MPa	200%FS	150%FS	

Accessory

Name	Appearance	Description	Item number
DIN43650		OMAL	100040301013
DIN43650 with cable		OMAL 1.5m	100040301018
LCD display		LCD12	100040100008

How to order

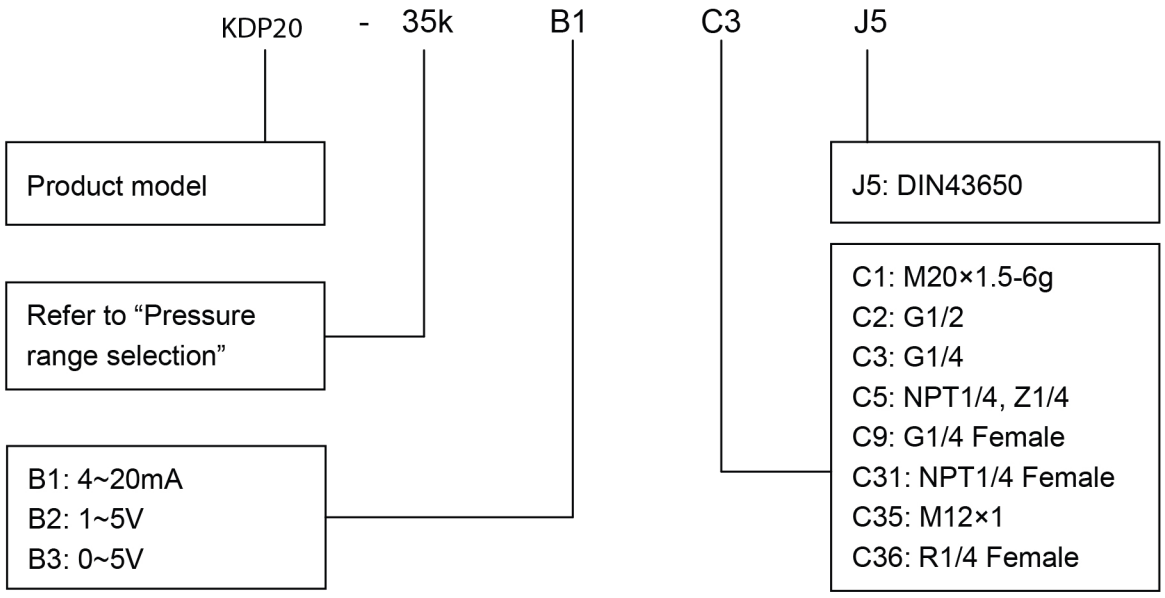

Example: KDP20 -35kB1C3J5

Refer to product model KDP20, with pressure range 0~35kPa, supply 24V, output signal 4~20mA, pressure port G1/4, electrical connection DIN43650.

Ordering tips:

(1) Ensure compatibility between measured media and contacting part of product.

(2) For special requirements on the appearance and performance parameters, customization is available.