KANAGAWA INSTRUMENTS

Resistance Thermometer

Model: KRT



Description

Resistance thermometers of this series are used for the measurement of liquid and gaseous media at low and medium pressures.

The resistance thermometer is screwed directly into the process. The electrical connection is made via connection terminals in the connection head (splash-proof).

The measuring inserts are available in two variants, depending upon the application. There is a choice between versions with a replaceable, spring-loaded miniature measuring insert and versions with a non-replaceable measuring resistor built directly into the thermowell tip.

Insertion length, process connection and sensor can each be selected for the respective application.

A large number of different explosion-protected approvals are available for the KRT.

Features

Sensor ranges from -200 … +1400 °C [-328 … +2552 °F]
- Compact design
- Universal application
- Direct installation into the process
- Explosion-protected versions are available for many approval types

Application

Machine building, plant and vessel construction
Propulsion technology
Air-conditioning and refrigeration systems
- Chemicals industry
- Energy industry
- Gas Processing industry
- Petrochemical industry
- General industrial services

Explosion protection (option)

The permissible power, P_{max}, as well as the permissible ambient temperature, for the respective category can be seen on the certificate for hazardous areas or in the operating instructions.

Approvals (explosion protection, further approvals)

Logo	Description	Country
CE	**EU declaration of conformity** ■ EMC directive [1] EN 61326 emission (group 1, class B) and immunity (industrial application) ■ RoHS directive	European Union
Ex	■ ATEX directive (option) Hazardous areas - Ex i Zone 0 gas: II 1G Ex ia IIC T1 ... T6 Ga Zone 1 gas: II 2G Ex ia IIC T1 ... T6 Gb Zone 20 dust: II 1D Ex ia IIIC T125 ... T65 °C Da Zone 21 dust: II 2D Ex ia IIIC T125 ... T65 °C Db	
EAC Ex	**EAC (option)** Hazardous areas - Ex i Zone 0 gas: 0Ex ia IIC T6 ... T1 Ga X Zone 1 gas: 1Ex ia IIC T6 ... T1 Gb X Zone 20 dust: Ex ia IIIC T80 ... T440 °C Da X Zone 21 dust: Ex ia IIIC T80 ... T440 °C Db X	Eurasian Economic Community
CCC	**CCC (option)** Hazardous areas - Ex i Zone 0 gas: Ex ia IIC T1 ~ T6 Ga Zone 1 gas: Ex ia IIC T1 ~ T6 Gb Zone 2 gas: Ex ic IIC T1 ~ T6 Gc Zone 20 dust: Ex iaD 20 T65/T95/T125°C Zone 21 dust: Ex iaD 21 T65/T95/T125°C	China
KCs	**KCs - KOSHA (option)** Hazardous areas - Ex i Zone 0 gas: Ex ia IIC T4 ... T6 Zone 1 gas: Ex ib IIC T4 ... T6	South Korea

Sensor

Measuring element

Pt100, Pt1000 [1] (measuring current: 0.1 ... 1.0 mA) [2]

Connection method	
Single elements	1 x 2-wire 1 x 3-wire 1 x 4-wire
Dual elements	2 x 2-wire

Connection head

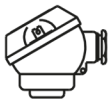

KT

Model	Material	Cable entry thread size	Ingress protection (max.) [1] IEC/EN 60529	Cap	Surface	Connection to neck tube
KT	Aluminium	M16 x 1.5 [2]	IP65	Cover with 2 screws	Blue, painted [3]	M24 x 1.5, ½ NPT

Model	Explosion protection		
	Without	Ex i (gas) Zone 0, 1, 2	Ex i (dust) Zone 20, 21
KT	x	x	x

1) IP ingress protection of the connection head. The IP ingress protections of the complete instrument KRT must not inevitably correspond to the connection head.
2) Standard
3) RAL 5022

Cable entry



Standard





Plastic



Brass, nickel-plated

The pictures show examples of connection heads.

Cable entry	Cable entry thread size	Min./max. ambient temperature
Standard cable entry	M16 x 1.5	-40 ... +80 °C
Plastic cable gland (cable Ø 6 ... 10 mm)	M16 x 1.5	-40 ... +80 °C
Brass cable gland, nickel-plated (cable Ø 6 ... 12 mm)	M16 x 1.5	-40 ... +80 °C

Cable entry	Colour	Ingress protection (max.) IEC/EN 60529 [1]	Explosion protection	
			without	Ex i (gas), zone 0, 1, 2
Standard cable entry	Blank	IP65	x	x
Plastic cable gland	Black or grey	IP65	x	x
Plastic cable gland, Ex e	Light blue	IP65	x	x
Plastic cable gland, Ex e	Black	IP65	x	x
Brass cable gland, nickel-plated	Blank	IP65	x	x
Brass cable gland, nickel-plated, Ex e	Blank	IP65	x	x

1) IP ingress protection of the cable gland. The IP ingress protections of the complete instrument KRT must not inevitably correspond to the cable gland.

Electrical connection

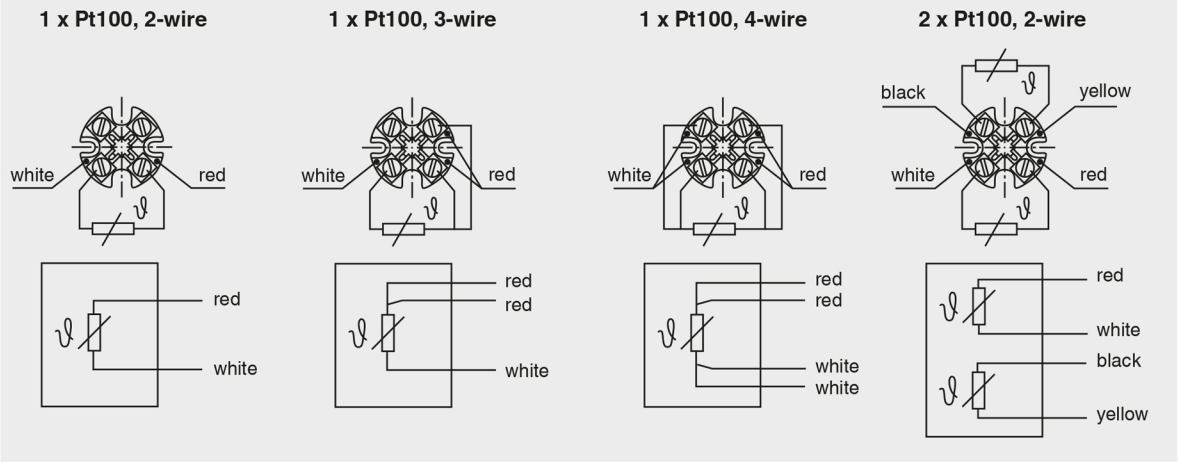

For the electrical connections of built-in temperature transmitters see the corresponding data sheets or operating instructions.

Components model TR10-D

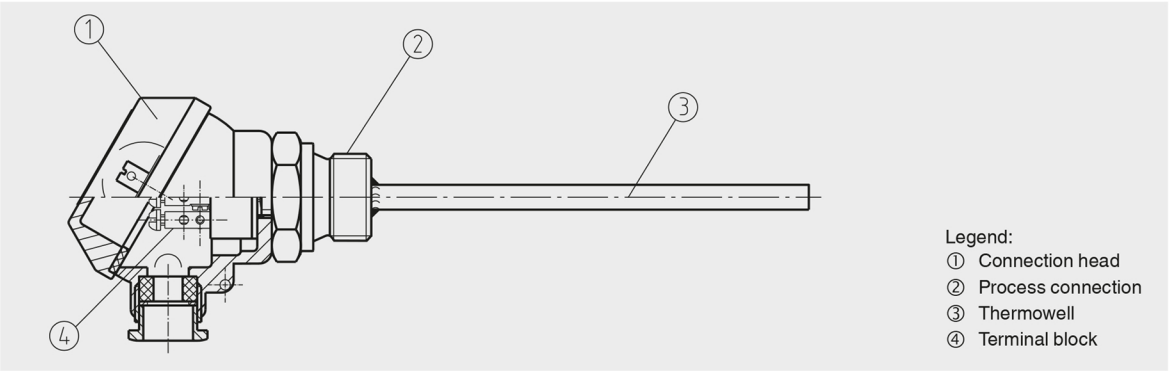

Dimensions in mm

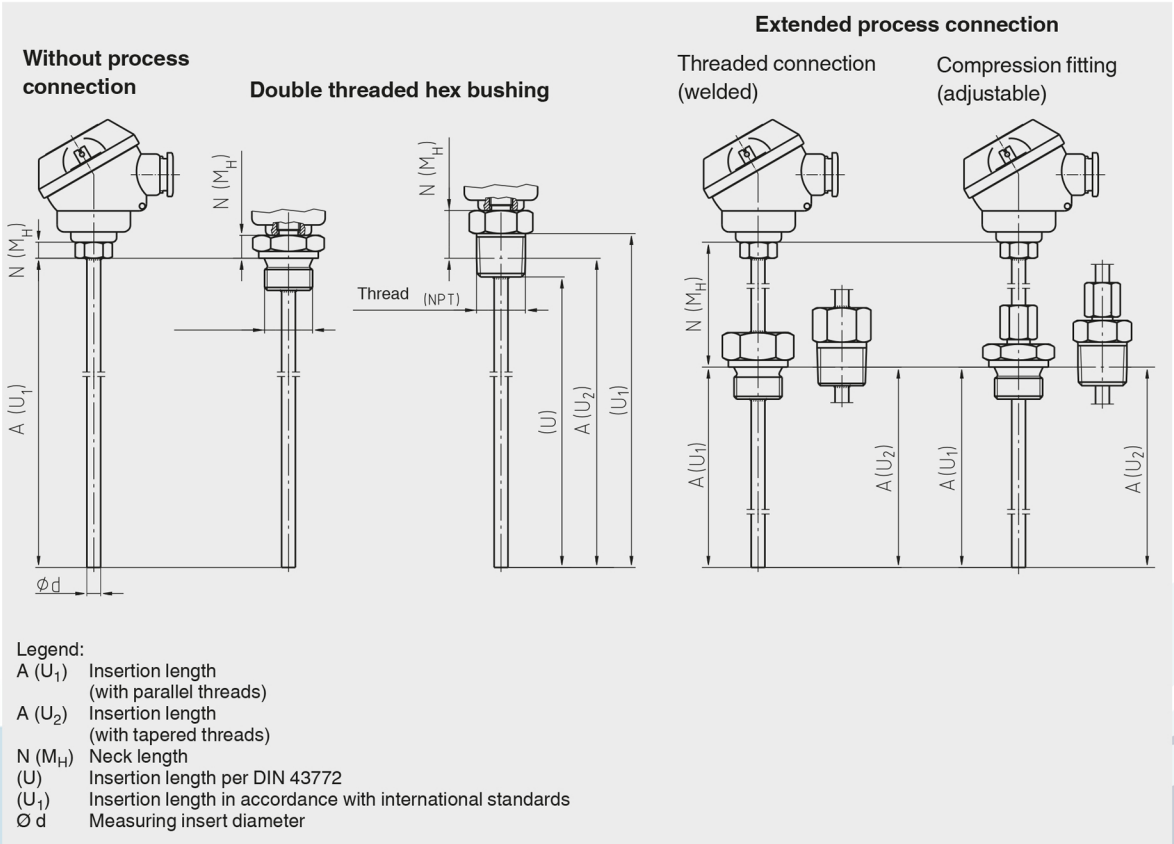

Legend:

A (U_1)	Insertion length (with parallel threads)
A (U_2)	Insertion length (with tapered threads)
N (M_H)	Neck length
(U)	Insertion length per DIN 43772
(U_1)	Insertion length in accordance with international standards
Ø d	Measuring insert diameter