KANAGAWA INSTRUMENTS

Flush Diaphragm Pressure Transmitter

Model: KFPT



Overwiew

KFPT Sanitary Flush Pressure Transmitter adopts flush diaphragm to directly receive pressure signal, takes diffused silicon pressure sensor as sensitive element and uses standard silicone or olive oil as pressure transfer medium.

With compact structure, corrosion resistance, vibration resistance and wide range temperature compensation, stainless steel 316L and specially welded flush isolation diaphragm are used for measurement end.It prevents fouling due to its exposed diaphragm, which is especially applicable to measure viscous fluid pressure with sanitary requirements of health care and food industry, solving problems of fouling, block, cleaning and sanitation. It is also widely applicable to sanitary industries and occasions with fouling forming medium.

Application

Occasion with easy block, high sanitary requirement and convenient cleaning such as medicine and health care, food, liquor-making, dairy and drinks

-Environmental protection chemical coating, polyurethane equipment, paint detection system etc.

Features

-316L flush diaphragm structure adopted for pressure connection Sanitary, anti-fouling

- Wide pressure range, can measure absolute pressure, gauge pressure and sealed reference pressure

- Good seal, long-term stable work

-With cooling fans, excellent performance for high temperature medium application

-Optional output signal, can be customized

Performance parameters	
Pressure range	-100kPa…0~35kPa…10MPa
Pressure reference	Gauge pressure, absolute pressure, sealed gauge pressure
Supply & output	Supply:12-30V;Output:4-20mA Supply:12~24V;Output:0~5V, 1~5V, 0.5~4.5V, 0~10V
Accuracy	0.5%FS
Hysteresis & repeatability	0.1%FS
Temperature drift	1.5%FS (@-20℃～85℃)
Response time	≤2ms (up to 90%FS)
Durability	≥10^6 pressure cycles
Ambient temp.	-20℃~85℃
Operating temp.	-40℃~85℃
Storage temp.	-40℃~120℃
Insulation resistance	≥100MΩ/250VDC
Vibration resistance	20g(20-5000HZ)
Shock resistance	10g/11ms
Protection	IP65
Medium compatibility	All the media compatible with stainless steel 316L

Electrical connection and wiring method		
Connector code	**J5: DIN43650**	**J1: 2088 housing**
Dimension In mm	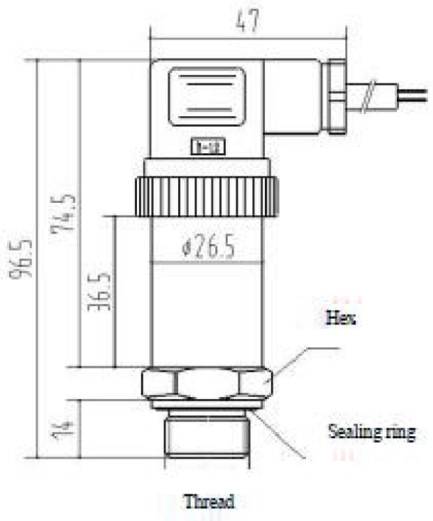	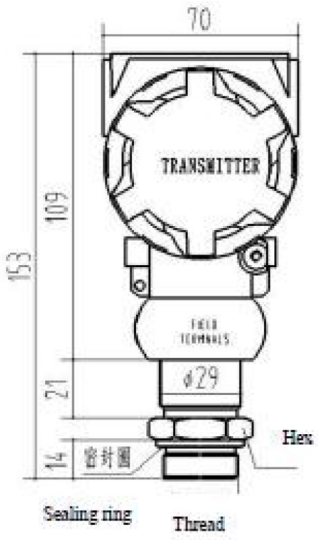
Protection	IP65	IP65

Electrical connection and wiring method (cont.)

Connection mode (Current output)	Red: Supply + Green: Current output	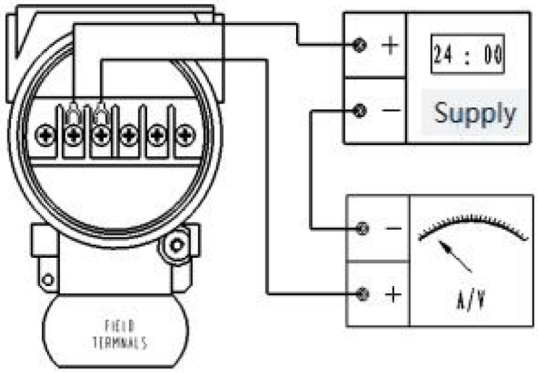
Connection mode (Voltage output)	Red: Supply + Green: GND Yellow: Voltage output	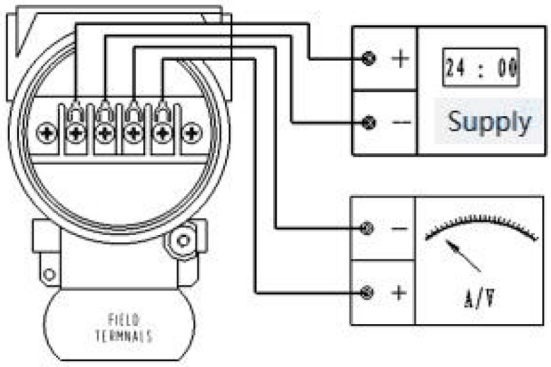

Pressure connection

Thread code	**C1: M20×1.5-6g**	**C2: G1/2**	**C7: NPT1/2, Z1/2**
Dimension In mm	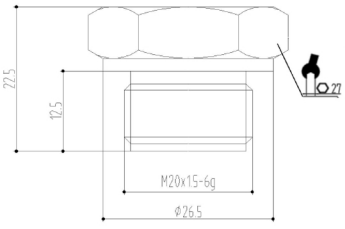	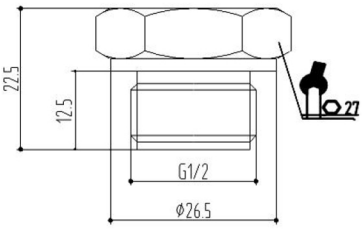	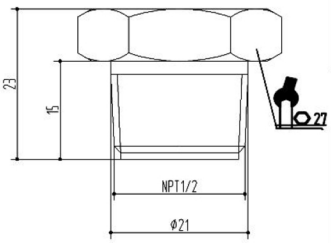
Thread code	**C10: R1/2, PT1/2, ZG1/2**	**C17: G1**	**C26: M30×1.5**
Dimension In mm	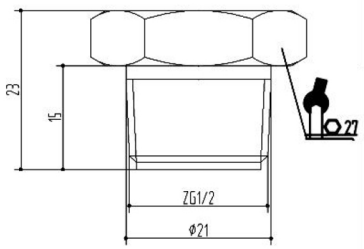	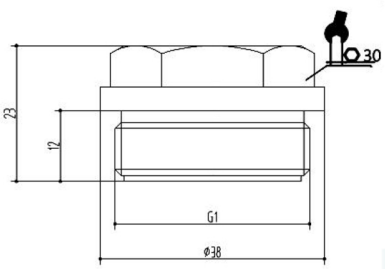	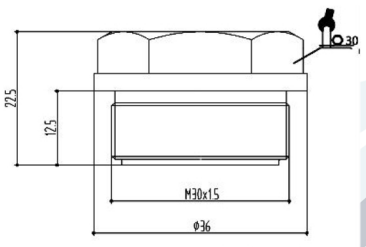

Pressure range selection

Code	Pressure reference	Pressure range	Overpressure	Burst pressure	Remark
35k	G	0~35kPa	300％FS	500%FS	
70k	G	0~70kPa	300％FS	500%FS	
100k	G、A	0~100kPa	200％FS	300%FS	
160k	G	0~160kPa	200%FS	300%FS	
250k	G	0~250kPa	200％FS	300%FS	
400k	G	0~400kPa	200％FS	300%FS	
600k	G	0~600kPa	200％FS	300%FS	
1M	G、S	0~1MPa	200％FS	300%FS	
1.6M	G、S	0~1.6MPa	200％FS	300%FS	
2.5M	G、S	0~2.5MPa	200％FS	300%FS	
4M	G、S	0~4MPa	150％FS	300%FS	
6M	S	0~6MPa	150％FS	300%FS	
10M	S	0~10MPa	150％FS	300%FS	

Note: G-Gauge pressure, A-Absolute pressure, S-Sealed gauge pressure

Accessories

Name	Appearance	Description	Material no.
Hirschmann plug made in China		Made in China (default)	100040301005
Imported Hirschmann plug		Totally imported	100040301013

How to order

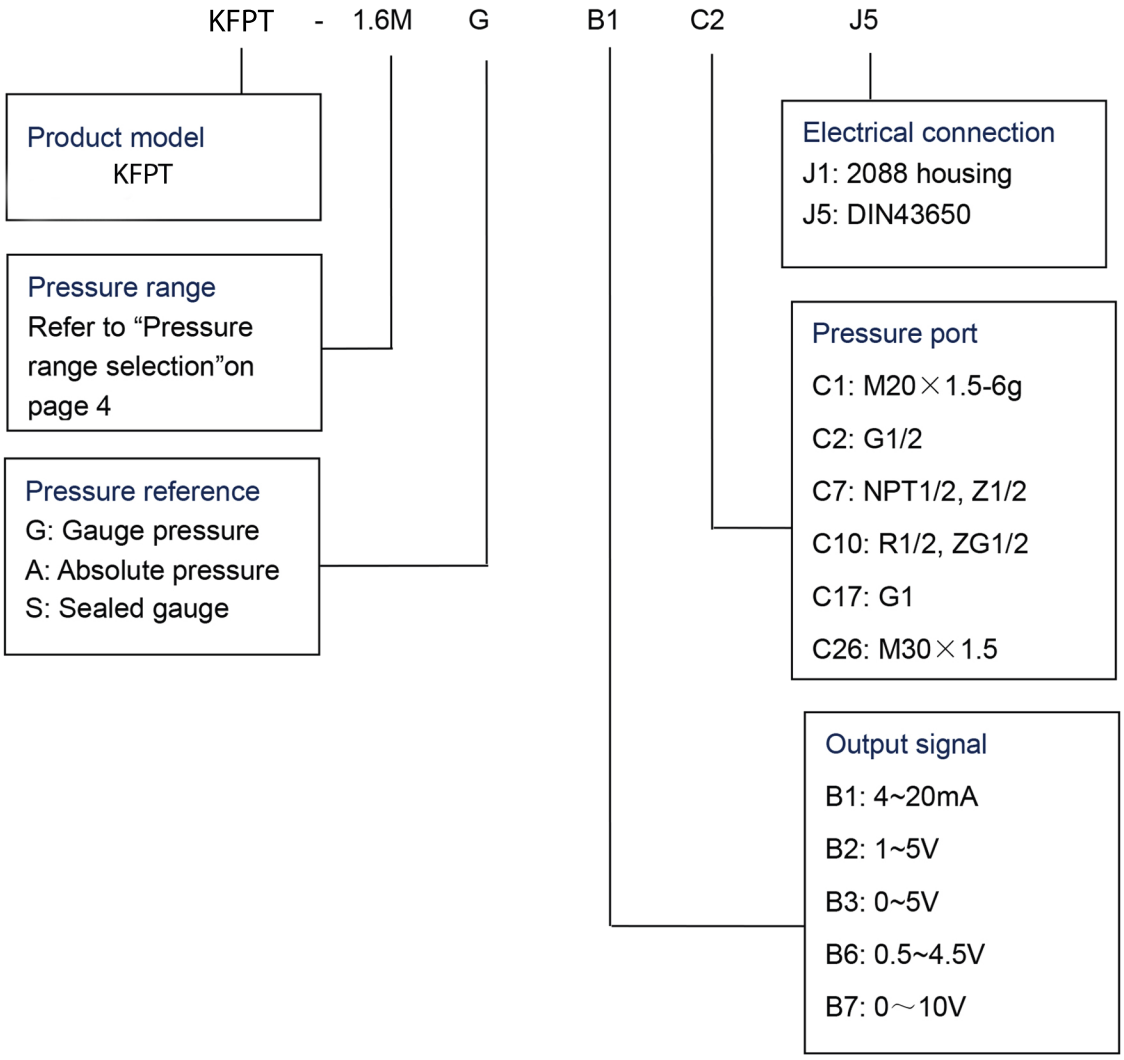

Example: KFPT-1.6MGB1C2J5

KFPT: product model. 1.6M: pressure range0~1.6MPa. G:Pressure reference gauge pressure. B1: output signal 4~20mA. C2: pressure port G1/2. J5:Electrical connection DIN43650.

Ordering tips

1. Please ensure compatibility between the measured medium and the contacting part of the product when placing an order.
2. If there are special requirements for product appearance and performance parameters, we can provide customization.

Kanagawa reserves the right to make any change in this publication without notice. The information provided is believed to be accurate and reliable as of this product sheet.

KANAGAWA INSTRUMENTS
Kanagawa Instruments Elektronik Ltd. Şti.
www.kanagawa.com.tr sales@kanagawa.com.tr
ADRES: MERKEZ MAH. ÇAVUŞBAŞI CAD. NO:105/1 ÇEKMEKÖY / İSTANBUL