Applications

- Acquisition and display of process values
- Transmission of process values to the control room, 4 ... 20 mA, 0 ... 20 mA, 0 ... 10 V
- Easy-to-read, analogue on-site display needing no external power
- Safety-related applications



Special features

- "Plug and play" with no configuration necessary
- Signal transmission per NAMUR
- Measuring ranges -1-0bar,0 ... 1 bar to 0 ... 600 bar
- Easy-to-read analogue display with nominal size 100 or 160
- Safety pressure gauge S3 per EN 837-1

Description

At any point where the process pressure has to be indicated locally, and, at the same time, a signal is wanted to be transmitted to a central controller or remote control room. Through the combination of a mechanical measuring system and precise electronic signal processing, the process pressure can be read securely, even if the power supply is lost.

KPG-AO fulfils all safety-related requirements of the relevant standards and regulations for the on-site display of the operating pressure of pressure vessels. An additional measuring point for mechanical pressure indication can thus be saved.

KPG-AO is based upon a high-quality, stainless steel safety pressure gauge with a nominal size of 100 or 160. The pressure gauge is manufactured in accordance with EN 837-1.

The all welded, robust bourdon tube measuring system produces a pointer rotation proportional to the pressure. An electronic angle encoder, proven in safety-critical automotive applications, determines the position of the pointer shaft - it is a non-contact sensor and therefore completely free from wear and friction. From this, the electrical output signal proportional to the pressure, 4 ... 20 mA, is produced. The electronic transmitter, integrated into the high-quality mechanical pressure gauge, combines the advantages of electrical signal transmission with the advantages of a local mechanical display.

The measuring span (electrical output signal) is set automatically along with the mechanical display, i.e. the scale over the full display range corresponds to 4 ... 20 mA. The electrical zero point can also be set manually.

Standard version

Nominal size in mm
100, 160

Accuracy class
1.0

Scale ranges
-1-0bar,0 ... 1 bar to 0 ... 600 bar
or all other equivalent vacuum or combined pressure and vacuum ranges

Process connection
Stainless steel 316L
Lower mount (LM)
G ½ B (male), 22 mm flats

Pressure element
Stainless steel, 316L
< 100 bar: C-type
≥ 100 bar: Helical type

Movement
Brass

Dial
Aluminium, white, black lettering

Pointer
Adjustable pointer, aluminium, black

Case
Stainless steel, with solid baffle wall (Solidfront) and blow-out back, scale ranges ≤ 0 ... 16 bar with compensating valve to vent case, ingress protection IP 54

Window
Laminated safety glass

Bezel ring
Cam ring (bayonet type), stainless steel

Options

- Other process connection
- Assembly on diaphragm seals (see product review diaphragm seals)
- Filling liquid (silicone M50, ingress protection IP 65)
- Measuring system Monel or stainless steel 1.4571
- Panel mounting flange, stainless steel or polished stainless steel
- Surface mounting lugs on the back, stainless steel
- Ambient temperature -40 °C (silicone oil filling)
- Window in polycarbonate
  (max. ambient temperature 80 °C, however not with Ex version)
- Version per ATEX Ex II 2G Ex ia IICT4 / T5 / T6
- Gost standard approval
- Switch contacts (see data sheet AC 08.01)

Cable connection

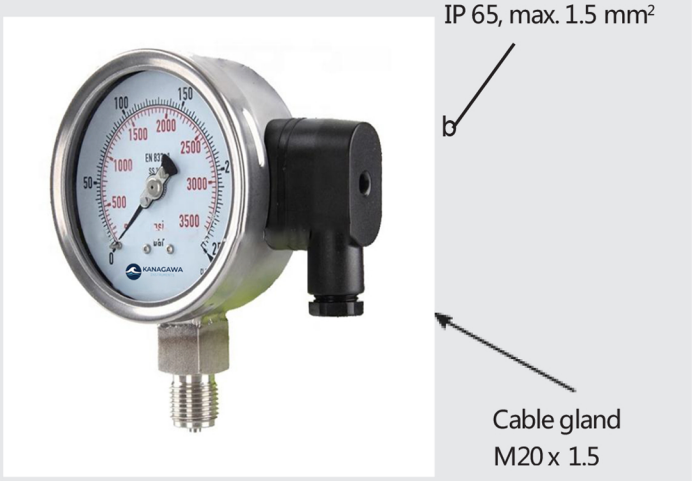

Dimensions :

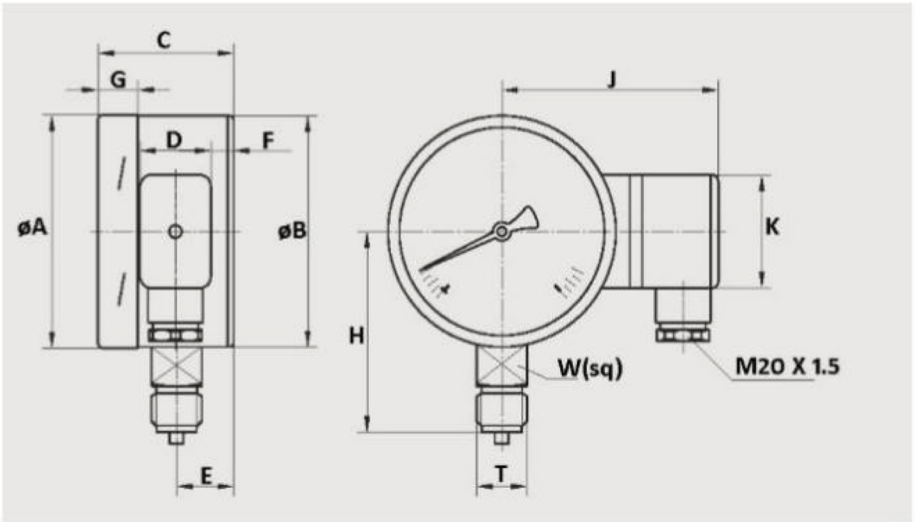

Dimensions														
Size		A	B	C	D	E	F	G	H	J	K	T	W	Weight
4"	mm	101	100	59.5	31	25	10	17	87	94	49		22	0.80 kg
	in	3.98	3.94	2.34	1.22	0.98	0.39	0.67	3.43	3.70	1.93	1/2"	0.87	1.76 lb
6"	mm	161	159	59.5	31	27	10	17.5	118	123.5	49		22	1.45 kg
	in	6.34	6.26	2.34	1.22	1.06	0.39	0.69	4.65	4.86	1.93	1/2"	0.87	3.20 lb

Electrical data

Power supply U_B	DC V	12 < U_B ≤ 30 (min. 14 with Ex version)
Influence of power supply	% FS/10 V	≤ 0.1
Permissible residual ripple	% ss	≤ 10
Output signal	Variant 1	4 ... 20 mA, 2-wire, passive, per NAMUR NE 43
	Variant 2	4 ... 20 mA, per ATEX Ex II 2G Ex ia IICT4 / T5 / T6
	Variant 3	0 ... 20 mA, 3-wire;
	Variant 4	0 ... 10 V, 3-wire
Permissible max. load R_A for variant 1 - 3		R_A ≤ (U_B - 12 V)/0.02 A with R_A in Ohm and U_B in Volt, however max. 600 Ω
Effect of load (variant 1 - 3)	% FS	≤ 0.1
Electrical zero point		through a jumper across terminals 5 and 6 (see operating instructions)
▪ Long-term stability of electronics	% FS/a	< 0.3
▪ Electr. output signal		≤ 1 % of the measuring span
Linearity	% of span	≤ 1.0 % (terminal method)
Safety-related maximum values		Ex version
▪ Power supply U_i	DC V	max. 30
▪ Short circuit rating I_i	mA	max. 100
▪ Power Pi	W	max. 1
▪ Internal capacitance C_i	nF	12
▪ Internal inductance L_i	mH	negligible
Electrical connection		Angular connector, 180 ° rotatable, wire protection, cable gland M20 x 1.5, incl. strain relief, connection cable: Outer diameter 7 - 13 mm, conductor cross-section 0.14 ... 1.5 mm², temperature resistance up to 60 °C
Wiring protection		Angular connector: IP 65 per EN 60529 / IEC 529
Assignment of terminals, 2-wire (variant 1 and 2) 1)		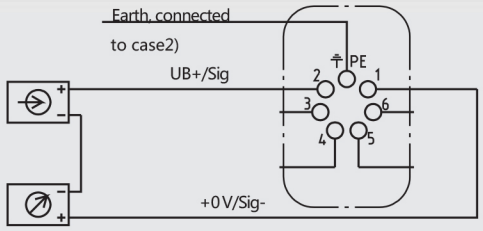 Terminals 3, 4, 5 and 6: Only for internal use 2) This connection must not be used for equipotential bonding. The instrument must be incorporated in the equipotential bonding via the process connection.

1) For 3-wire connnection see operating instruction

Mechanical data

Mechanical design		Safety pressure gauge S3 with solid baffle wall per EN 837-1
Display		Nominal size 100 or 160
Measuring ranges	bar	0 ... 0.6 to 0 ... 1600 bar; -1... 0; -1... +25 (others as options)
Process connection		G ½ B (male) (others available as options)
Damping options		
▪ For dynam. pressure load		Restrictor in the pressure channel
▪ For vibration		Liquid filling of the case
Pressure limitation		
▪ Steady		Full scale value
▪ Fluctuating		0.9 x full scale value
▪ Short time		1.3 x full scale value
		The recommendations for the use of mechanical pressure measuring systems in accordance with EN 837-1 must be observed
Accuracy		
▪ Mechanical display		≤ 1 % of measuring span (class 1.0 per EN 837-1)
Permissible temperature range		
▪ Medium	°C	-40... +100
▪ Ambient	°C	-40 ... +60 (with window in polycarbonate max. 80 °C)
Temperature effect	%/10 K	max. ±0.4 of full scale value (when the temperature deviates from 20 °C reference temperature)
Case ingress protection		IP 54, filled IP 65

Ordering Part # :(sample)

KPG-AO L 40 B 2 P 300 P S1

Output signal

S1:4-20mA	S5:0.5-4.5V
S2:0-5V	S6:0-20mA
S3:1-5V	S7:RS485
S4:0-10V	S8:RS232

Pressure unit

A(atm),B(bar),C(mbar),D(Mpa),E(kpa),F(mmH2O)
G(in.H2O),H(mmHg).I(in.Hg)J(pa),K(kg/cm2),P(psi)

Pressure range

Gauge type

P : Pressure gauge
V : Vacuum gauge
C : Compound gauge

Connection size

4: 1/4"
3: 3/8"
2: 1/2"
1: 1"

Thread type

B: BSP
Z: BSPT
N: NPT
S: Special Thread

Diameter of the gauge

40 : 4" (100mm)
60 : 6" (150mm)

Mounting

L: lower connection
B: Back connection
R: Lower connection with back flange , wall mounting
V: Center back connection with front flange panel mounting
U: Center back connection with U-Clamp ,panel mounting

Model No.