80GHZ Radar Lever Transmitter

Radar for Solids in Process Industry
Model:KRLT-S





Field of Application

The KRLT-S belongs to the new generation of 80 GHz radar sensors. It is suitable for continuous, non-contact level measurement in simple solid applications. Wizards guidethrough commissioning, retesting and verification of the instrument and guarantee easy handling. The small beam angle is perfect for measurements in narrow silos. Heartbeat Technology detects unwanted anomalies, such as buildup, for increased productivity.

Benefits

Easy handling through intuitive operation and wizards, for commissioning and verification

Easier troubleshooting thanks to recommended actions in the display

Safety by Design: Device development according to IEC 61508

Increased productivity because of process monitoring, verification and diagnostics during operation with Heartbeat Technology

Easy device integration into asset management systems through digital communication

Drawing and Dimensions

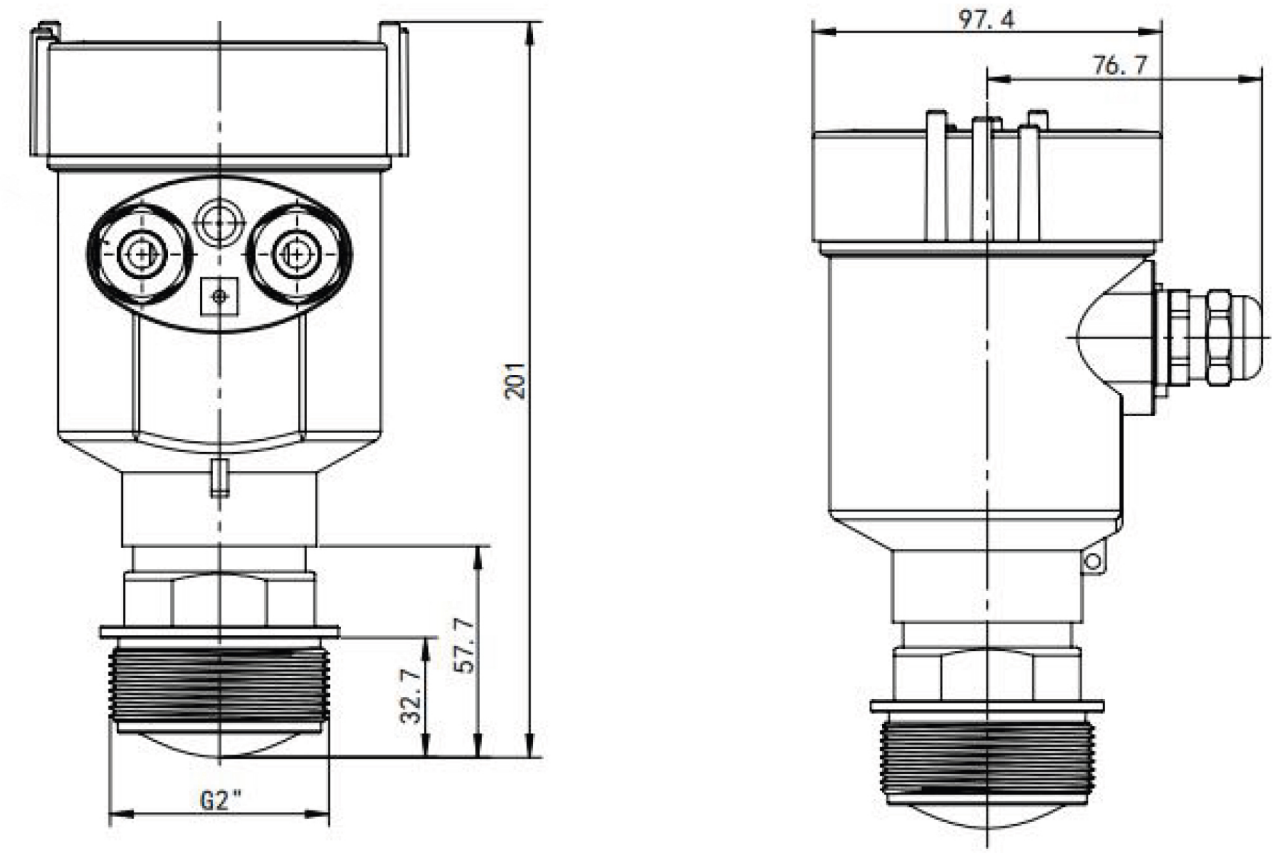

The KRLT-S is an 80GHz radar transmitter for continuous level measurement of Liquid , solids and water application.

* High frequency: 80GHz, More Focus.
* Accuracy: ±2 mm
* PTFE sealed antenna, not affected by temperature, condensate water.
* Small emitting angle: ±2.9°.
* G'' thread connection, customized thread/flange.

Specification

Model	KRTL-S
Product Type	FMCW Radar Level Transmitter
Application	*Liquid Measurement (exp: water, up to 30m) *Standard liquid measurement (exp: Corrosive chemical) *Bulk solids
Frequency	77GHz-81GHz
Measurement Range	10M 20M 30M 50M
Accuracy	±2mm
Beam Angle	±2.9°
Antenna Material	SS 304/Sealed PTFE
Process Connection	Default G2 Thread; Thread and flange is customized
Process Temperature	-40°C to 85°C
Process Pressure	Normal atmospheric pressure
Signal output	4-20mA/RS485(Modbus - RTU)/Hart(Optional)
Power	Two-wire DC 24V (22V~30V)
Protection	IP67
Explosion-proof	Exd II CT6Gb
Sizes:	96mmx200mm weight: 2kg.
Power of PA	12dbm

KRLT-S Model Selection

KRLT-S	**80GHz Radar Level Transmitter (Aluminum housing, with display)**							
	Code	**Medium Type**						
	N/S	Liquid/Solids						
		Code	**Measuring Range(m)**					
		0.2~30	10 20 30 50					
			Code	**Connection**				
			G	G'' Thread (G2)				
			F	Flange				
				Code	**Temperature**			
				N	-40-85°C			
					Code	**Cable entry**		
					M/N	M20×1.5(F)/1/2NPT		
						Code	**Electronics**	
						T	Two-wire 4...20mA	
						M	Modbus	
						H	HART	
							Code	**Protection**
							P	IP67
								Code **Explosion-proof**
								E **Ex db ia IIC T6 Gb**
KRLT-S	**N**	**10**	**G**	**N**	**M**	**TMH**	**P**	**E**